Chanute is an exceptional community creating opportunities by investing in the future, while building on our successes

CHANUTE CITY COMMISSION
REGULAR MEETING
MONDAY, AUGUST 10, 2020
6:30 P.M.

AGENDA

1. **Call To Order**

2. **Pledge of Allegiance**

3. **Invocation**

4. **Approval of Agenda**

5. **Consent Agenda**
   Minutes – City Commission – July 27, 2020
   Warrant Register dated July 29, 2020
   Warrant Register dated August 5, 2020

6. **Public Comments**

7. **City Manager's Report**

8. **Public Hearing**
   A) Conduct Public Hearing for 2021 Municipal Budget

9. **New Business**
   A) 2021 Budget Adoption and Certification
   B) Consider Ordinance Providing Rate Adjustments – Water, Refuse, and Sewer
   C) Consider Landfill Tonnage Rate Increase
   D) Consider Approval to Purchase Trash Truck
   E) Consider Approval to Purchase Sewer Truck
   F) Consider Approval to Purchase Loader
   G) Consider Approval to Purchase Dump Trucks
   H) Consider Approval to Mill and Overlay
   I) Resolution Declaring Property at 722 South Grant in Violation of Chanute Municipal Code 10.30.030
   J) Resolution Declaring Property at 317 South Wilson in Violation of Chanute Municipal Code 8.20.010 (G) & 10.30.030
   K) Resolution Declaring Property at 617 North Grant in Violation of Chanute Municipal Code 8.20.010 (E), (G), & 10.30.030
   L) Resolution Declaring Property at 517 North Santa Fe in Violation of Chanute Municipal Code 8.20.010 (E) & (G)
   M) Resolution Declaring Property at 301 South Ashby in Violation of Chanute Municipal Code 8.20.010 (E) & (G)
   N) Resolution Declaring Property at 507 North Evergreen in Violation of Chanute Municipal Code 8.20.010 (G)

10. **Commission Comments**

11. **Adjournment**

CHANUTE CITY COMMISSION
REGULAR MEETING
MONDAY, AUGUST 10, 2020

CONSENT AGENDA – 5A

The Consent Agenda is used by cities to approve non-controversial or routine matters by a single motion and vote of the City Commission. Examples of such items include approval of minutes, payment of claims, routine renewal of leases, routine resolutions and certain staff reports. If any Commissioner wants to discuss any item on the Consent Agenda, that item is separated and considered at a later time on the agenda.

MINUTES
Minutes – City Commission – July 27, 2020
Warrant Register dated July 29, 2020
Warrant Register dated August 5, 2020

City Commission Minutes
Regular Session
July 27, 2020

City Commission Chambers
101 S Lincoln Ave.
Chanute, KS 66720

CALL TO ORDER – PLEDGE OF ALLEGIANCE

Mayor Jacob LaRue presided and called the meeting to order at 6:30 p.m., the Pledge of Allegiance was recited.

Commissioners Present:	Mayor Jacob LaRue and Commissioners Kevin Berthot, Sam Budreau, Phillip Chaney, and Tim Fairchild.
Staff Present:	Todd Newman, Interim City Manager; Brian Duncan, Assistant City Attorney; Tina Bailey, City Clerk; Ryan Follmer, Assistant City Manager; Cory Kepley, Chief Finance Officer; Gas Distribution Superintendent, Monty Bailey; and Chief Power Plant Operator, Brandon Westerman.

INVOCATION

The invocation was given by Commissioner Tim Fairchild.

AGENDA

The Agenda was approved on motion by Commissioner Fairchild, seconded by Commissioner Berthot. Voting Aye: All. Motion carried unanimously.

CONSENT AGENDA

The Consent Agenda is used to approve non-controversial or routine matters by a single motion and vote. The Consent Agenda consisted of the following:

- Minutes – City Commission – July 13, 2020
- Minutes – Planning Commission – July 2, 2020
- Warrant Register dated July 15, 2020
- Warrant Register dated July 22, 2020

Motion made by Commissioner Fairchild, seconded by Commissioner Budreau, to approve the Consent Agenda. Voting Aye: All. Motion carried unanimously.

PUBLIC COMMENTS

None

CITY MANAGER'S REPORT

Interim City Manager Todd Newman gave his report on City activities and operations. Items reported on included an update on City Pool operations, the City's Chip and Seal project, the Santa Fe Sports Complex Turf project, recent discussion by the Neosho County Commission

DRAFT

relating to the 21st and Plummer intersection, and a potential September Joint Work Session between the Chanute City Commission and Neosho County Commission.

General discussion was made.

Commission consensus was for the City Manager to move forward with obtaining an Engineer Traffic Study for the intersection located at 35th Street and South Santa Fe.

The Commission requested additional information relating to road maintenance options for the east northbound lane of South Santa Fe at 21st Street.

OLD BUSINESS

REQUEST TO EXTEND DEADLINE – CHANUTE CDBG-CV LOCAL PLAN FOR DISTRIBUTION OF FUNDS

At the June 22, 2020 regular meeting the City Commission approved the Chanute CDBG-CV Local Plan for Distribution of Chanute Grant No. 20-CV-008. The approved plan was to have all funds approved and/or allocated at the July 27, 2020 City Commission meeting.

Due to changes and documentation requirements that have occurred at the Federal level to the distribution of CDBG-CV program funds, Chanute Regional Development Authority Executive Director Matt Godinez is requesting that the deadline for these funds to be distributed be pushed back to October 26, 2020. This will allow CRDA to submit individual applications to the City Commission for review and approval until all funds are depleted.

General discussion was made. Comments were made by CRDA Director of Programming and Community Progress Kim Ewert.

Motion made by Commissioner Fairchild, seconded by Commissioner Berthot, to approve the October 26, 2020 deadline date for the Chanute CDBG-CV Local Plan for Distribution of Funds. Voting Aye: All. Motion carried unanimously.

Commissioner Chaney requested that Ms. Ewert follow-up with the City Manager verifying the process for City Commission approval related to approval of applications all at once versus one at a time.

NEW BUSINESS

APPOINT CITY COMMISSION MEMBER TO THE CITY OF CHANUTE LAND BANK BOARD

At their regular meeting on March 9, 2020 the governing body adopted an Ordinance creating a Land Bank for the City of Chanute.

Chanute Regional Development Authority Executive Director Matt Godinez is requesting a member of the City of Chanute Commission to serve on the City of Chanute Land Bank Board. A copy of the Ordinance and Bylaws was provided for review.

General discussion was made. Comments were made by CRDA Director of Programming and Community Progress Kim Ewert.

DRAFT

Motion made by Mayor LaRue, seconded by Commissioner Berthot, to appoint Chanute City Commissioner Tim Fairchild to serve on the City of Chanute Land Bank Board for a two-year term. Voting Aye: All. Motion carried unanimously.

CONSIDER PURCHASE OF NEW GAS ODORIZATION SYSTEM AND REGULATOR STATION WITH LINE HEATER

The City's current Gas Odorization System and Regulator Station is outdated and some replacement parts are obsolete. The odorant piping is leaking which results in numerous call-outs for reports of smelling gas. The odorant pump loses prime and oil resulting in continuous maintenance.

City staff received quotes for the purchase of a new Gas Odorization System and Regulator Station with Line Heater and provided a brief summary of the request.

General discussion was made. Comments were made by Interim City Manager Todd Newman, Assistant City Manager Ryan Follmer, Gas Distribution Superintendent Monty Bailey, and Chief Power Plant Operator Brandon Westerman.

Motion made by Commissioner Budreau, seconded by Commissioner Fairchild, to approve the purchase of New Gas Odorization System from Utility Safety & Design, Inc. in the amount of $93,786.75 and Regulator Station with Line Heater from Koons Gas Measurement in the amount of $66,519.72, totaling $160,306.47. Voting Aye: All. Motion carried unanimously.

CONSIDER PUBLIC HEARING DATE FOR 2021 MUNICIPAL BUDGET

Pursuant to K.S.A. 79-2933, the City is required to hold a budget hearing prior to August 15th.

The budget establishes the allocation of financial resources expected to be available to deliver municipal services for 2021.

General discussion was made. Comments were made by Chief Finance Officer Cory Kepley and Interim City Manager Todd Newman.

The Commission thanked the City Manager and Chief Finance Officer for transparency during the budget work sessions.

Motion made by Commissioner Budreau, seconded by Commissioner Berthot, to set August 10, 2020 as the date to hold the required Public Hearing for the 2021 Municipal Budget. Voting Aye: All. Motion carried unanimously.

Commission consensus was to place refuse, sewer, and water rates on the next Agenda for City Commission further discussion and review.

CONSIDER ORDINANCE GRANTING APPROVAL OF SPECIAL USE PERMIT – 332 WEST MAIN

Request was made by USD 413 Board for a Special Use Permit for the Operation of Educational Use for Grades 5-12 on the property located at 332 West Main as required in the Comprehensive Zoning Regulations.

DRAFT

On July 2, 2020, the Planning Commission conducted the required public hearing at which no appearances in opposition were made or letters in opposition received. After the hearing, the Planning Commission approved this request for a Special Use Permit.

Under the provisions of Article 11 of the Chanute Zoning Regulations, this permit can be issued only after approval of both the Planning Commission and the City Commission. Either Commission may place reasonable conditions to said permit.

Motion made by Commissioner Chaney, seconded by Commissioner Budreau, to pass the Ordinance Granting Approval of a Special Use Permit for the Operation of Educational Use for Grades 5-12 on the property located at 332 West Main. Voting Aye: All. Motion carried unanimously.

The Ordinance was assigned: No. S-535

APPOINT MEMBERS TO THE HUMAN RELATIONS BOARD

The City of Chanute Human Relations Board was formed to further provide an amicable relation among various groups of Chanute's population; make studies, surveys and investigations to provide data as needed; work to improve intergroup relations when needed; to eliminate discriminatory practices if identified.

The term for the five (5) current board members expired. Board vacancies were published and the City Manager's office received two (2) board applications to date.

General discussion was made.

Mayor LaRue, with the consent of the City Commission, appointed James Halstead and Laura Mallett to the Human Relations Board, each serving a three-year term beginning August 1, 2020.

The City will continue to accept board applications to fill the remaining three (3) vacancies.

NEIGHBORHOOD REVITALIZATION APPLICATION – GRATZ PETERS

Gratz Peters has submitted an application under the Neighborhood Revitalization Program. It has been verified that the property listed under the scope of the application, 1116 Osa Martin Blvd., parcel identification number 067-049-30-0-10-13-010.00-0 is within the scope of the city limits of Chanute. The application has been reviewed by the Neosho County Appraisers office along with the Neosho County Treasurer's office.

General discussion was made.

Motion made by Commissioner Budreau, seconded by Commissioner Berthot, to approve the Neighborhood Revitalization Application – Gratz Peters. Voting Aye: All. Motion carried unanimously.

PROPERTY RESOLUTION – 1609 SOUTH EVERGREEN

Motion made by Commissioner Fairchild, seconded by Commissioner Budreau, to adopt resolution declaring that the above property is in violation of Chanute Municipal Codes and

DRAFT

authorizing abatement of certain nuisances as presented. Voting Aye: All. Motion carried unanimously.

The Resolution was assigned: No. 2020-34

PROPERTY RESOLUTION – 112 WEST ASH

Steve Fickel, property owner 112 West Ash requested that the City Commission not adopt the Resolution as presented and allow him a 30-day extension.

General discussion was made.

Motion made by Commissioner Fairchild, seconded by Commissioner Budreau, to adopt resolution declaring that the above property is in violation of Chanute Municipal Codes and authorizing abatement of certain nuisances prior to August 26, 2020. Voting Aye: All. Motion carried unanimously.

The Resolution was assigned: No. 2020-35

PROPERTY RESOLUTION – 909 SOUTH FOREST
PROPERTY RESOLUTION – 309 SOUTH TENNESSEE
PROPERTY RESOLUTION – 921 SOUTH SANTA FE
PROPERTY RESOLUTION – 8 EAST 4TH

Motion made by Commissioner Budreau, seconded by Commissioner Berthot, to adopt resolution declaring that the above properties are in violation of Chanute Municipal Codes and authorizing abatement of certain nuisances as presented. Voting Aye: All. Motion carried unanimously.

The Resolutions were assigned: No. 2020-36, No. 2020-37, No. 2020-38, and No. 2020-39

PROPERTY RESOLUTION – 1019 NORTH GRANT

General discussion was made. Comments were made by Mr. Steve Fickel.

Motion made by Commissioner Budreau, seconded by Commissioner Berthot, to adopt resolution declaring that the above property is in violation of Chanute Municipal Codes and authorizing abatement of certain nuisances as presented. Voting Aye: All. Motion carried unanimously.

The Resolution was assigned: No. 2020-40

COMMISSION COMMENTS

Commissioner Chaney requested that City staff research approval of a "no parking" zone on East 4th Street between South Santa Fe Avenue and Lincoln Avenue.

General discussion was made. Comments were made by Interim City Manager Todd Newman.

City Manager Newman will provide follow-up to the City Commission relating to this item.

DRAFT

Commissioner Chaney requested the City staff provide a list and the number of occupants utilizing the Trade School.

Interim City Manager Todd Newman reported that the Trade School currently has two (2) occupants.

Commissioner Chaney requested follow-up relating to City utility bill distribution by e-mail.

General discussion was made. Comments were made by Chief Finance Officer Cory Kepley.

Commissioner Chaney commented on the City's sewer revenue and expense fund report.

General discussion was made. Comments were made by Chief Finance Officer Cory Kepley.

Commissioner Chaney thanked the community for wearing their masks in public and encouraged everyone to continue wearing mask, practice social distance, and wash your hands.

Mayor LaRue commented on tonight's property resolution discussion and encouraged anyone with violations to contact the City Manager for available abatement options, prior to City Commission review and approval.

Mayor LaRue reminded everyone that the Chamber of Commerce will hold a candidate forum at the Memorial Building on Thursday, July 30, 2020.

ADJOURNMENT

Motion made by Commissioner Fairchild, seconded by Commissioner Budreau, to adjourn. Voting Aye: All. Motion carried unanimously. Meeting adjourned at 8:04 p.m.

Tina L Bailey, CMC
City Clerk

DRAFT

CHANUTE CITY COMMISSION
REGULAR MEETING
MONDAY, AUGUST 10, 2020

AGENDA ITEM – 8A

ITEM: Public Hearing

SUBJECT: Conduct Public Hearing for 2021 Municipal Budget

BACKGROUND: At their July 27, 2020 regular meeting, the City Commission set August 10, 2020 as the date to hold the required Public Hearing regarding the 2021 Municipal Budget.

ANALYSIS: The purpose of the hearing is to allow the public to speak about the proposed budget.

FINANCIAL CONSIDERATION: The Municipal Budget as proposed sets a maximum spending limit for FY 2021.

LEGAL CONSIDERATION: None at this time.

RECOMMENDATION: Conduct Public Hearing to allow formal action under Item 9A.

NOTICE OF BUDGET HEARING

2021

The governing body of
City of Chanute
will meet on August 10, 2020 at 6:30 P.M. at City Commission Room for the purpose of hearing and answering objections of taxpayers relating to the proposed use of all funds and the amount of ad valorem tax.
Detailed budget information is available at City Managers Office and will be available at this hearing.

BUDGET SUMMARY

Proposed Budget 2021 Expenditures and Amount of 2020 Ad Valorem Tax establish the maximum limits of the 2021 budget.
Estimated Tax Rate is subject to change depending on the final assessed valuation.

	Prior Year Actual for 2019		Current Year Estimate for 2020		Proposed Budget Year for 2021		
FUND	Expenditures	Actual Tax Rate *	Expenditures	Actual Tax Rate *	Budget Authority for Expenditures	Amount of 2020 Ad Valorem Tax	Estimate Tax Rate *
General	8,105,919	18.678	8,424,404	19.571	8,722,754	1,096,154	17.406
Debt Service	7,315,746	2.979	2,918,903	2.048	1,787,075	79,312	1.259
Library	364,366	6.218	416,900	6.053	412,000	381,260	6.054
Library Employee Benefits	66,975	1.120	78,000	1.161	78,000	70,488	1.119
Employee Benefits	1,033,027	11.828	1,053,343	12.205	1,178,379	957,286	15.201
Special Liability	16,661		75,000		75,000		
.25 Sales Tax- CRDA/City	191,296		480,000		600,000		
Special Highway	241,364		577,943		495,810		
Industrial							
Recreation Complex	50,065		42,500		42,500		
Special Parks & Rec.	27,000		21,330		27,371		
Special Alcohol Program	13,730		20,765		24,765		
Tourism & Convention	49,000		90,000		140,000		
Special Obligation (TIF)	58,798		58,900		58,900		
Electric	24,442,707		28,339,338		28,954,330		
Water	1,790,310		2,030,064		1,978,157		
Gas	5,550,883		6,765,317		7,086,732		
Refuse	1,215,692		1,222,443		1,371,526		
Wastewater	2,132,863		2,600,304		2,384,217		
Fiber	530,948		973,454		345,365		
Ele/Wtr/Gas Bond & Interes	1,112,735		1,108,035		2,310,000		
Non-Budgeted Funds-A	1,248,583						
Non-Budgeted Funds-B	3,636,605						
Non-Budgeted Funds-C	4,746,068						
Totals	63,941,341	40.823	57,296,943	41.038	58,072,881	2,584,500	41.039
Less: Transfers	7,917,974		8,500,826		8,101,879		
Net Expenditure	56,023,367		48,796,117		49,971,002		
Total Tax Levied	2,525,004		2,584,194		xxxxxxxxxxxxxxxx		
Assessed Valuation	61,857,080		62,975,166		62,976,795		
Outstanding Indebtedness, January 1,	2018		2019		2020		
G.O. Bonds	17,070,000		13,090,000		12,000,000		
Revenue Bonds	7,010,000		6,050,000		9,590,000		
Other	1,620,230		2,715,642		3,339,693		
Lease Purchase Principal	351,722		247,631		1,463,159		
Total	26,051,952		22,103,273		26,392,852		

*Tax rates are expressed in mills

Jacob LaRue
City Official Title: Mayor

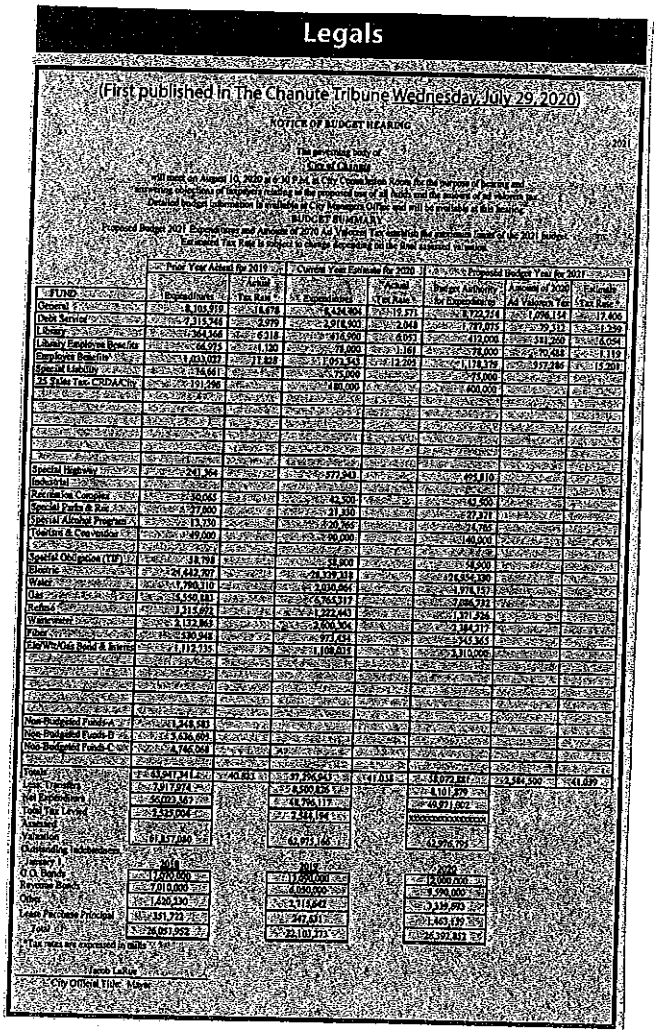

Legals

(First published in The Chanute Tribune Wednesday, July 29, 2020)

NOTICE OF BUDGET HEARING

The governing body of

City of Chanute

will meet on August 10, 2020 at 6:00 P.M. at City Commission Room for the purpose of hearing and supporting objections of taxpayers relating to the proposed use of all funds and the amount of ad valorem tax.

Detailed budget information is available at City Manager's Office and will be available at this hearing.

BUDGET SUMMARY

Proposed Budget 2021 Expenditures and Amount of 2020 Ad Valorem Tax establish the maximum limits of the 2021 budget.

Estimated Tax Rate is subject to change depending on the final assessed valuation.

	Prior Year Actual for 2019		Current Year Estimate for 2020		Proposed Budget Year for 2021	
FUND	Expenditures	Actual Tax Rate *	Expenditures	Actual Tax Rate *	Budget Authority for Expenditures	Amount of 2020 Ad Valorem Tax
General	8,105,919	18.678	8,434,904	15.571	8,722,714	1,098,154
Debt Service	7,315,748	2.979	2,918,903	2.048	2,787,075	39,312
Library	364,566	6.318	416,900	8.057	412,008	311,292
Unemployment Benefits	68,975	24.120	78,000	1.161	78,000	70,458
Employee Benefits	1,033,037	71.888	1,093,543	12.205	1,178,179	937,286
Special Liability	14,641		75,000		75,000	
25 Sales Tax CMDA/City	101,596		400,000		400,000	
Special Highway	240,364		577,343		495,810	
Industrial						
Parking Lot Complex	30,065		42,500		42,500	
Special Parks & Rec	4,277,000		21,350		27,371	
Special Alcohol Program	13,330		20,265		24,765	
Tourism & Convention	49,000		50,000		40,000	
Special Obligation (TIF)	18,798		18,800		18,800	
Electric	24,442,707		28,139,118		27,854,390	
Water	1,790,310		2,000,864		1,978,157	
Gas	5,550,883		6,963,317		7,086,721	
Refuse	1,315,692		1,222,443		1,371,926	
Wastewater	2,132,865		2,606,306		2,384,217	
Water Pollution Control	186,040		977,434		945,365	
City/Wa/Gas Bond & Interest	1,112,135		1,108,012		1,310,000	
Non-Budgeted Funds-A	1,248,583					
Non-Budgeted Funds-B	5,636,604					
Non-Budgeted Funds-C	4,746,068					
Totals	61,947,241	140.883	57,296,543	141.038	61,072,817	2,356,300	141.039
Less: Transfers	7,917,974		8,509,038		4,101,879		
Net Expenditures	54,029,267		48,787,505		56,971,002		
Total Tax Levied	7,535,004		7,324,194				
Assessed Valuation							
Outstanding Indebtedness, January 1,	61,877,080		63,971,140		63,974,020		
	2018		2019		2020		
G.O. Bonds	11,800,000		11,000,000		12,000,000		
Revenue Bonds	7,015,000		4,050,000		3,990,000		
Other	1,420,230		1,119,642		3,139,695		
Lease Purchase Principal	331,722		247,651		1,463,139		
Total	20,051,952		22,107,273		20,592,832		

* Tax rates are expressed in mills.

Jamie LaRue

City Official Title: Mayor

Affidavit of Publication

STATE OF KANSAS, NEOSHO COUNTY, ss:
Tiffany Brown, being first duly sworn,
deposes and says: That *she* is *Classified Manager*
of *THE CHANUTE TRIBUNE,* a daily newspaper printed in the State of Kansas, and published in and of general circulation in Neosho County, Kansas, with a general paid circulation on a daily basis in Neosho County, Kansas, and that said newspaper is not a trade, religious or fraternal publication.

Said newspaper is a daily published at least weekly 50 times a year: has been so published continuously and uninterruptedly in said county and state for a period of more than five years prior to the first publication of said notice; and has been admitted at the post office of Chanute, in said county as second class matter.

That the attached notice is a true copy thereof and was published in the regular and entire issue of said newspaper for 1 consecutive DAY, the first publication thereof being made as aforesaid on the 29th day of July 2020, with subsequent publications being made on the following dates:

_____, 2020 _____, 2020

_____, 2020 _____, 2020

Subscribed and sworn to and before me this 29th day of July, 2020

Notary Public

My commission expires: January 9, 2023

Printer's Fee ..... $ 100.00

Affidavit, Notary's Fee ..... $ 10.00

Additional Copies ..... $ —

Total Publication Fees ..... $ 110.00

STATE OF KANSAS NOTARY PUBLIC

SHANNA LYN GUIOT
My Appointment Expires
January 9, 2023

CHANUTE CITY COMMISSION
REGULAR MEETING
MONDAY, AUGUST 10, 2020

AGENDA ITEM – 9A

ITEM: New Business

SUBJECT: 2021 Budget Adoption and Certification

INITIATOR: Chief Finance Officer, Cory Kepley

BACKGROUND: At the conclusion of the Budget Public Hearing, the Commission is requested to:

1. Adopt a Budget.

2. Certify to the County Clerk that the City Commission complied with State Budget Law- The Commissioners will be requested to sign the certificate to certify to the County Clerk that Chanute has complied with State Budget requirements.

ANALYSIS: The County Clerk has submitted a preliminary assessed value for Chanute at $62,976,795.00. Based on this assessment, the value of one mill should be approximately $62,976, which is $81 less per mill than the last year's mill value of $63.057. The estimated tax rate for the 2021 budget is 41.039 mills which is .001 more than the 2020 assessed rate of 41.038

FINANCIAL CONSIDERATION: The 2021 Budget Certification establishes a maximum spending limit of $58,072,881. This limit is .48% higher than the 2020 limit of $57,791,945. The Property tax levy is set at $2,584,500, which is more than the 2020 proposed levy of $2,584,194.

LEGAL CONSIDERATION: None.

RECOMMENDATION: Consider formal action in adopting the 2021 budget.

CERTIFICATE

To the Clerk of Neosho County, State of Kansas
We, the undersigned, officers of
City of Chanute
certify that: (1) the hearing mentioned in the attached publication was held;
(2) after the Budget Hearing this budget was duly approved and adopted as the maximum expenditures for the various funds for the year 2021; and
(3) the Amounts(s) of 2020 Ad Valorem Tax are within statutory limitations.

Table of Contents:		Page No.	2021 Adopted Budget: Budget Authority for Expenditures	Amount of 2020 Ad Valorem Tax	County Clerk's Use Only
Computation to Determine Limit for 2021		2			
Allocation of MVT, RVT, 16/20M Veh Tax		3			
Schedule of Transfers		4			
Statement of Indebtedness		5			
Statement of Lease-Purchases		6			
Computation to Determine State Library Grant		7			
Fund	**K.S.A.**				
General	12-101a	8	8,722,754	1,096,154	
Debt Service	10-113	9	1,787,075	79,312	
Library	12-1220	9	412,000	381,260	
Library Employee Benefits		10	78,000	70,488	
Employee Benefits		10	1,178,379	957,286	
Special Liability		11	75,000		
.25 Sales Tax- CRDA/City		11	600,000		
Special Highway		12	495,810		
Industrial		12			
Recreation Complex		13	42,500		
Special Parks & Rec.		13	27,371		
Special Alcohol Program		14	24,765		
Tourism & Convention		14	140,000		
		15			
Special Obligation (TIF)		15	58,900		
Electric		16	28,954,330		
Water		16	1,978,157		
Gas		17	7,086,732		
Refuse		17	1,371,526		
Wastewater		18	2,384,217		
Fiber		18	345,365		
Ele/Wtr/Gas Bond & Interest		19	2,310,000		
Non-Budgeted Funds-A		20			
Non-Budgeted Funds-B		21			
Non-Budgeted Funds-C		22			
Totals		xxxxxx	58,072,881	2,584,500	
					County Clerk's Use Only
Budget Summary		23			
Neighborhood Revitalization Rebate		24			Nov 1, 2020 Total Assessed Valuation

Tax Lid Limit (from Computation Tab) 3,267,446
Does the City need to hold an election? **NO**

Assisted by: _____

Address: _____

Email: _____

Attest: _____ 2020

County Clerk

Governing Body

CPA Summary

Computation to Determine Limit for 2021

				Amount of Levy
1. Total tax levy amount in 2020 budget				+ $ 2,584,194
2. Library levy in 2020 budget				- $ 381,143
Other tax entity levy in 2020 budget				- $ 73,073
3. Net tax levy				$ 2,129,978

Percentage Adjustments

4. New improvements, remodeling and renovations for 2020 :			+	148,521
5. Increase in personal property for 2020 :				
5a. Personal property 2020	+	6,120,155		
5b. Personal property 2019	-	6,131,051		
5c. Increase in personal property (5a minus 5b)			+	0 (Use Only if > 0)
6. Valuation of annexed territory for 2020 :				
6a. Real estate	+	0		
6b. State assessed	+	0		
6c. New improvements	+	0		
6d. Total adjustment (sum of 6a, 6b, and 6c)			+	0
7. Valuation of property that has changed in use during 2020 :			+	0
8. Expiration of property tax abatements			+	0
9. Expiration of TIF, Rural Housing, and NR Districts (Incremental assessed value over base)			+	
10. Total valuation adjustment (sum of 4, 5c, 6d, 7, 8 & 9)				148,521
11. Total estimated valuation July 1, 2020		62,976,795		
12. Percentage adjustment factor - Line 10 / (Line 11 - Line 10))				0.0024
13. Percentage adjustment increase (12 times 3)				+ $ 5,035
14. Consumer Price Index for all urban consumers for calendar year 2019 (5 year average)				1.80%
15. Consumer Price Index adjustment (Line 3 times Line 14)				$ 38,340
16. Total Percentage Adjustments				**$ 43,375**

Revenue Adjustments

17. Property tax revenues for debt service in 2021 budget:	+	79,312
Property tax revenues for debt service in 2020 budget:	-	128,926
Increased property tax revenues spent on debt service		0

18. Property tax revenues spent for public building commission and lease payments in the 2021 budget: (Obligations must have been incurred prior to July 1, 2016) (Do not include amounts already reported in debt service levy)			+	
Property tax revenues spent for public building commission and lease payments in the 2020 budget:			-	
Increase property tax revenues spent on public building commission and lease payments				0
19. Property tax revenues spent on special assessments in the 2021 budget: (Do not include amounts already reported in debt service levy)			+	
20. Property tax revenues spent on court judgments or settlements and associated legal costs in the 2021 budget:			+	
21. Property tax revenues spent on Federal or State mandates (effective after June 30, 2015) and loss of funding from Federal sources after January 1, 2017 in the 2021 budget:			+	
22. Property tax revenues spent on expenses realted to disaster or Federal Emergency in the 2021 budget:			+	
23. Law enforcement expenses - 2021 budget:		+ 2,603,975		
Law enforcement expenses - 2020 budget:		- 1,923,883		
CPI adjustment	1.80%	34,630		
Increased law enforcement expenses in 2021 budget: (Do not include building construction or remodeling costs)			+	645,462
24. Fire protection expenses - 2021 budget:		+ 1,477,378		
Fire protection expenses - 2020 budget:		- 1,557,486		
CPI adjustment	1.80%	28,035		
Increased fire protection expense in 2021 budget: (Do not include building construction or remodeling costs)			+	0
25. Emergency medical expenses - 2021 budget:		+		
Emergency medical expenses - 2020 budget:		-		
CPI adjustment	1.80%	0		
Increased emergency medical expenses in 2021 budget: (Do not include building construction or remodeling costs)			+	0
26. Total Revenue Adjustments				**645,462**

Levies on Behalf of Another Political or Governmental Subdivision

27. Library Levy - 2021 budget:	+	381,266
Other tax entity levy - 2021 budget:	+	67,365
Other tax entity levy - 2021 budget:	+	
28. Total Levies on Behalf of Another Political or Governmental Subdivision	+	**448,631**
29. Levy for Dissolved Taxing Entity (Only Use the First Year After Dissolved)	+	
30. Total Computed Tax Levy		**3,267,446**

If the Total Computed Tax Levy *is* sufficient for the city, then no additional computations are required. The city will use the Total Computed Tax Levy as the budget year tax limit.

If the Total Computed Tax Levy is *not* sufficient for the city, then complete the computations on Excel tab 'Comp2' to determine if the city is exempt from the election requirement.

Other Tax Levy Limitation Tests

Property Decline Test

Note - In order to use the test, there must be a decline in tax revenues in at least one of the years listed below.

2017 Tax Levy (Less Levy for other Governmental Units)		
2018 Tax Levy (Less Levy for other Governmental Units)		None
2019 Tax Levy (Less Levy for other Governmental Units)		None
2020 Tax Levy (Less Levy for other Governmental Units)		None
Average Tax Levy (last three years)	#DIV/0!	
CPI Adjustment	#DIV/0!	
Average Tax Levy Adjusted by CPI	#DIV/0!	
2021 Total Tax Levy (Less Levy for Other Governmental Units)		
Exemption from Election Requirement	**#DIV/0!**	

"

Lost Valuation Test

Assessed Valuation Loss

2021 Tax Levy (Less Levy for other Governmental Units)		
2020 Tax Levy (Less Levy for other Governmental Units)		
Change in Levy	0	
CPI Adjustment		38,340
2021 Mill Rate (Less Mills for other Governmental Units)		
Loss of Assessed Valuation Multiplied by 2021 Mill Rate		0
Total Adjustment for Loss of Assessed Valuation		38,340
Exemption from Election Requirment		**Yes**

City of Chanute

2021

Allocation of MV, RV, 16/20M, Commercial Vehicle, and Watercraft Tax Estimates

Budgeted Fund for 2020	Ad Valorem Levy Tax Year 2019	Allocation for Year 2021				
		MVT	RVT	16/20M Veh	Comm Veh	Watercraft
General	1,232,478	143,720	1,294	626	3,412	539
Debt Service	128,926	15,034	135	65	357	56
Library	381,143	44,445	400	193	1,055	166
Library Employee Benef	73,073	8,521	77	37	202	32
Employee Benefits	768,574	89,624	807	390	2,128	335
Special Liability						
.25 Sales Tax- CRDA/C						
TOTAL	2,584,194	301,344	2,713	1,311	7,154	1,128

County Treas Motor Vehicle Estimate	301,344
County Treas Recreational Vehicle Estimate	2,713
County Treas 16/20M Vehicle Estimate	1,311
County Treas Commercial Vehicle Tax Estimate	7,154
County Treas Watercraft Tax Estimate	1,128

Motor Vehicle Factor	0.11661
Recreational Vehicle Factor	0.00105
16/20M Vehicle Factor	0.00051
Commercial Vehicle Factor	0.00277
Watercraft Factor	0.00044

City of Chanute 2021

Schedule of Transfers

Expenditure Fund Transferred From:	Receipt Fund Transferred To:	Actual Amount for 2019	Current Amount for 2020	Proposed Amount for 2021	Transfers Authorized by Statute
General Fund	Capital Improvement #2 Fund				KSA 12-1,118
General Fund	Equipment Reserve Fund			87,000	KSA 12-1,117
General Fund	General Obligation B&I	124,226	-		KSA 12-6a16
General Fund	Special Obligation B&I	58,850	58,900	58,900	KSA 12-6a16
General Fund	General Obligation B&I	36,750	36,750	36,750	KSA 12-1,118
Electric Utility Fund	General Fund	2,250,000	2,500,000	2,500,000	KSA 12-825d
Electric Utility Fund	General - Ash Grove FF	325,716	330,000	330,000	KSA 12-825d
Electric Utility Fund	General Obligation B&I	2,222,820	2,169,485	835,602	KSA 12-825d
Electric Utility Fund	Capital Improvement #1	100,000	200,000	200,000	KSA 12-1,118
Electric Utility Fund	Equipment Reserve Fun	200,000	200,000	200,000	KSA 12-1,117
Electric Utility Fund	Electric, Water, and Gas	861,130	879,180	2,122,620	KSA 12-825d
Water Utility Fund	General Fund	80,000	80,000	80,000	KSA 12-825d
Water Utility Fund	General Obligation B&I	100,000	178,500	172,897	KSA 12-825d
Water Utility Fund	Capital Improvement #1	50,000	125,000	100,000	KSA 12-1,118
Water Utility Fund	Equipment Reserve Fun	25,000	50,000	50,000	KSA 12-1,117
Refuse Utility Fund	General Fund	50,000	50,000	50,000	KSA 12-825d
Refuse Utility Fund	General Obligation B&I	30,500	33,015	33,015	KSA 12-825d
Refuse Utility Fund	Landfill Bond & Interest	98,662	100,000	100,000	KSA 12-1,117
Refuse Utility Fund	Landfill Closing Reserv	10,000	10,000	10,000	KSA 12-1,117
Sewer Utility Fund	General Fund	62,500	62,500	65,000	KSA 12-825d
Sewer Utility Fund	General Obligation B&I	100,000	100,000	100,000	KSA 12-825d
Sewer Utility Fund	I&I Sewer Proj Reserve	684,860	850,000	550,000	KSA 12-631o
Gas Utility Fund	General Fund	200,000	200,000	250,000	KSA 12-825d
Gas Utility Fund	Electric, Water, and Gas	246,960	284,996	307,095	KSA 12-825d
Gas Utility Fund	Capital Improvement #1 Fund			100,000	KSA 12-1,118
Gas Utility Fund	Equipment Reserve Fund			100,000	KSA 12-1,117
Utility Services	Equipment Reserve Fund				KSA 12-1,117
	Totals	7,917,974	8,498,326	8,438,879	
	Adjustments				
	Adjusted Totals	7,917,974	8,498,326	8,438,879	

*Note: Adjustments are required only if the transfer is being made in 2020 and/or 2021 from a non-budgeted fur

City of Chanute

2021

STATEMENT OF INDEBTEDNESS

Type of Debt	Date of Issue	Date of Retirement	Interest Rate %	Amount Issued	Beginning Amount Outstanding Jan 1,2020	Date Due		Amount Due 2020		Amount Due 2021	
						Interest	Principal	Interest	Principal	Interest	Principal
General Obligation:											
2012A	09/27/2012	11/01/2024	0.4-2.2	4,940,000	1,840,000	05/01, 11/01	11/1	34,865	460,000	27,505	460,000
2014C	12/01/2014	11/01/2022	2.20	530,000	530,000	5/1,11/1		11,660		11,660	
2016B	10/27/2016	11/01/2031	2.45	1,500,000	1,500,000	5/1,11/1		36,750		36,750	
2017A	06/28/2017	11/01/2029	3.00	3,785,000	3,140,000	5/1,11/1	11/1	80,435	310,000	73,460	315,000
2019A	09/12/2019	11/01/2030	3.00	4,990,000	4,990,000	5/1,11/1		170,076		149,700	
Total G.O. Bonds					**12,000,000**			**333,786**	**770,000**	**299,075**	**775,000**
Revenue Bonds:											
2014A	03/11/2014	11/01/2022	2.00	6,990,000	3,740,000	5/1,11/1	11/1	77,560	1,000,000	57,560	900,000
2016A	07/15/2016	11/01/2031	2.30	1,325,000	1,325,000	5/1,11/1		30,475		30,475	
2019A	09/12/2019	11/01/2023	2.25	4,525,000	4,525,000	5/1,11/1	11/1	120,070	1,070,000	81,075	1,230,000
Total Revenue Bonds					**9,590,000**			**228,105**	**2,070,000**	**169,110**	**2,130,000**
Other:											
Tax Incentive Fund Series 2(	09/27/2006	09/01/2026	4.80	703,000	340,000	3/1,9/1	3/1,9/1	15,840	42,000	13,776	44,000
KWPC 2837	01/23/2012	08/01/2035	2.42	360,428	353,183	2/1,8/1	2/1,8/1	9,556	17,858	9,064	18,351
KPWS 2722	10/30/2012	08/01/2032	4.01	112,639	45,304	2/1,8/1	2/1,8/1	1,790	2,717	1,680	2,827
KDHE C20 1930-01	01/05/2012	09/01/2033	2.42	1,260,883	644,360	3/1,9/1	3/1,9/1	23,894	60,954	22,410	62,438
KDHE C20 2045-01	03/14/2018	09/01/2039	1.90	3,142,488	1,340,820	3/1,9/1	3/1,9/1	66,884	127,267	64,133	130,018
KPWSLF 2931	07/03/2019	08/01/2039	1.78	870,000	616,026	2/1,8/1	2/1,8/1	12,797	40,852	17,878	36,062
Total Other					**3,339,693**			**130,761**	**291,648**	**128,941**	**293,696**
Total Indebtedness					**24,929,693**			**692,652**	**3,131,648**	**597,126**	**3,198,696**

STATEMENT OF CONDITIONAL LEASE-PURCHASE AND CERTIFICATE OF PARTICIPATION*

Item Purchased	Contract Date	Term of Contract (Months)	Interest Rate %	Total Amount Financed (Beginning Principal)	Principal Balance On Jan 1,2020	Payments Due 2020	Payments Due 2021
Street Sweeper	10/30/2017	60	1.83	218,000	133,159	46,024	46,024
Fire Truck	04/17/2020	120	2.25	1,330,000	1,330,000		150,017
				Totals	**1,463,159**	**46,024**	**196,041**

***If you are merely leasing/renting with no intent to purchase, do not list--such transactions are not lease-purchases.

WORKSHEET FOR STATE GRANT-IN-AID TO PUBLIC LIBRARIES AND REGIONAL LIBRARY SYSTEMS

Budgeted Year: 2021

Library found in: City of Chanute
Neosho County

Two tests are used to determine eligibility for State Library Grant. If the grant is approved, then the municipality's library will be paid the grant on February 15 of each year.

First test:

	Current Year 2020	Proposed Year 2021
Ad Valorem	$381,143	$381,260
Delinquent Tax	$7,500	$7,500
Motor Vehicle Tax	$44,366	$44,445
Recreational Vehicle Tax	$351	$400
16/20M Vehicle Tax	$195	$193
LAVTR	$0	$0
	$0	$0
TOTAL TAXES	$433,555	$433,798
Difference in Total Taxes:	$243	
Qualify for grant: Qualify		

Second test:

Assessed Valuation	$62,975,166	$62,976,795
Did Assessed Valuation Decrease?	No	
Levy Rate	6.053	6.054
Difference in Levy Rate:	0.001	
Qualify for grant: Qualify		

Overall does the municipality qualify for a grant? **Qualify**

If the municipality would not have qualified for a grant, please see the below narrative for assistance from the State Library.

City of Chanute 2021

FUND PAGE FOR FUNDS WITH A TAX LEVY

Adopted Budget **General**	Prior Year Actual for 2019	Current Year Estimate for 2020	Proposed Budget Year for 2021
Unencumbered Cash Balance Jan 1	1,068,751	840,885	586,046
Receipts:			
Ad Valorem Tax	1,072,412	1,232,478	xxxxxxxxxxxxxxxx
Delinquent Tax	39,584	20,000	40,000
Motor Vehicle Tax	111,085	133,281	143,720
Recreational Vehicle Tax	991	1,054	1,294
16/20M Vehicle Tax	495	586	626
Commercial Vehicle Tax	2,164	4,036	3,412
Watercraft Tax	115,266	475	539
Gross Earning (Intangible) Tax	0	0	0
LAVTR	0	0	0
City and County Revenue Sharing	0	0	0
Rental Motor Vehicle Tax	41	100	100
Sales Tax	2,664,035	2,560,575	2,550,000
Franchise Tax	361,981	374,500	372,000
Special Assessments	12,865	9,000	69,000
Intergovernmental			
Highway Connecting Links	22,295	16,500	23,000
Local alcoholic Liquor Tax	24,270	21,330	27,371
Licenses and Permits			
Business Licenses, Permits & Fees	15,599	16,700	18,250
Non Business Licenses, permits & Fees	36,030	49,150	42,250
Charges for Services			
General Government Services	1,525	1,400	1,700
Public Safety Services	84,020	83,000	86,200
Public Works Services	2,205	12,000	5,000
Health Services	8,486	6,250	8,500
Swimming Pool Fees	57,025	63,000	64,500
Golf Course Fees	215,132	237,700	240,500
Culture and Recreation Services	18,555	19,350	18,350
Fines, Forfeitures and Penalties			
Fines	137,863	180,000	180,000
Use of Money and Property			
Rents & Royalties	48,987	55,000	52,000
Interest Income	504	200	500
Sale of Equipment and Property	115,815	120,000	119,000
Other Receipts			
Reimbursed Expenses	96,834	99,400	101,200
Insurance Proceeds			
Miscellanous	3,122	5,000	5,000
Operating Transfers from			
Electric Utility Fund	2,250,000	2,500,000	2,500,000
Water Utility Fund	80,000	80,000	80,000
Gas Utility Fund	200,000	200,000	250,000
Refuse Utility Fund	50,000	50,000	50,000
Sewer Utility Fund	62,500	62,500	65,000
Ash Grove Reserves			
In Lieu of Taxes (IRB)			
Interest on Idle Funds			
Neighborhood Revitalization Rebate	-33,633	-45,000	-52,036
Miscellaneous			
Does miscellaneous exceed 10% Total Rec			
Total Receipts	**7,878,053**	**8,169,565**	**7,066,976**
Resources Available:	**8,946,804**	**9,010,450**	**7,653,022**

City of Chanute

FUND PAGE - GENERAL

Adopted Budget General	Prior Year Actual for 2019	Current Year Estimate for 2020	Proposed Budget Year for 2021
Resources Available:	8,946,804	9,010,450	7,653,022
Expenditures:			
City Commission	128,602	135,900	86,500
Municipal Court	145,336	151,332	158,679
City Manager Office	54,944	81,500	87,592
General Admin Service	797,169	411,304	397,541
Human Resources	81,285	46,000	45,900
Community Development	464,565	455,084	376,228
Legal Services	144,989	161,740	164,328
Public Buildings/Grounds	395,497	595,519	462,705
Special Program/Projects	15,815	15,000	16,000
Police	1,692,854	1,923,883	1,771,207
Dispatch			832,768
Fire	1,301,884	1,557,486	1,477,378
Animal Control	98,589	154,005	154,652
Civil Defense	13,241	21,350	13,650
Streets and Roads	970,188	1,061,053	1,027,117
Cemetery	211,812	251,960	249,098
Airport	276,555	297,656	319,226
Parks	452,778	407,042	383,238
Swimming Pool	226,095	260,300	202,300
Baseball/Softball Parks	178,914	31,913	50,000
Golf Course	357,547	346,056	400,195
Tree Program	4,125	5,000	5,000
Auditorium Mgt Services	33,135	51,321	39,452
Business Incubator	0	0	0
Economic Development	60,000	2,000	2,000
Subtotal detail (Should agree with detail)	8,105,919	8,424,404	8,722,754
Cash Forward (2021 column)			
Miscellaneous			
Does miscellaneous exceed 10% Total Exp			
Total Expenditures	**8,105,919**	**8,424,404**	**8,722,754**
Unencumbered Cash Balance Dec 31	840,885	586,046	xxxxxxxxxxxxxxxxx
2019/2020/2021 Budget Authority Amount	8,829,851	8,424,404	8,722,754
		Non-Appropriated Balance	
		Total Expenditure/Non-Appr Balance	8,722,754
		Tax Required	1,069,732
	Delinquent Comp Rate:	2.5%	26,422
		Amount of 2020 Ad Valorem Tax	1,096,154

CPA Summary

City of Chanute 2021

Adopted Budget **General Fund - Detail Page 1**	Prior Year Actual for 2019	Current Year Estimate for 2020	Proposed Budget Year for 2021
Expenditures:			
City Commission			
Salaries	23,615	29,000	29,000
Contractual	104,666	106,700	57,300
Commodities	18	200	200
Capital Outlay	303		
Total	**128,602**	**135,900**	**86,500**
Municipal Court			
Salaries	77,975	86,432	87,579
Contractual	61,827	63,900	69,600
Commodities	514	1,000	1,500
Capital Outlay	5,020		
Total	**145,336**	**151,332**	**158,679**
City Manager Office			
Salaries	25,522	23,100	30,442
Contractual	22,564	47,150	47,150
Commodities	1,068	6,500	6,500
Capital Outlay	5,790	4,750	3,500
Total	**54,944**	**81,500**	**87,592**
General Admin Service			
Salaries			
Contractual	48,024	49,000	48,500
Commodities			
Capital Outlay	749,145	362,304	349,041
Total	**797,169**	**411,304**	**397,541**
Human Resources			
Salaries	70,592	27,400	27,400
Contractual	7,548	15,000	15,000
Commodities	3,145	2,400	2,300
Capital Outlay		1,200	1,200
Total	**81,285**	**46,000**	**45,900**
Community Development			
Salaries	285,728	290,382	210,990
Contractual	139,308	116,400	134,650
Commodities	10,017	2,600	2,500
Capital Outlay	29,512	45,702	28,088
Total	**464,565**	**455,084**	**376,228**
Legal Services			
Salaries	108,620	113,740	119,328
Contractual	36,125	47,000	44,000
Commodities	244	1,000	1,000
Capital Outlay			
Total	**144,989**	**161,740**	**164,328**
Public Buildings/Grounds			
Salaries	23,079	25,994	26,405
Contractual	333,789	538,875	403,800
Commodities	38,629	30,650	32,500
Capital Outlay			
Total	**395,497**	**595,519**	**462,705**
Page 1 - Total	**2,212,387**	**2,038,379**	**1,779,473**

City of Chanute 2021

Adopted Budget General Fund - Detail Page 2	Prior Year Actual for 2019	Current Year Estimate for 2020	Proposed Budget Year for 2021
Expenditures:			
Special Program/Projects			
Salaries			
Contractual	15,815	15,000	16,000
Commodities			
Capital Outlay			
Total	**15,815**	**15,000**	**16,000**
Police			
Salaries	1,234,938	1,352,328	1,398,678
Contractual	266,075	313,400	122,150
Commodities	55,474	102,300	101,250
Capital Outlay	136,367	155,855	149,129
Total	**1,692,854**	**1,923,883**	**1,771,207**
Dispatch			
Salaries		362,784	725,568
Contractual		48,550	97,100
Commodities		5,050	10,100
Capital Outlay			
Total	**0**	**416,384**	**832,768**
Fire			
Salaries	1,119,462	1,084,592	1,124,269
Contractual	62,611	104,025	71,590
Commodities	55,388	113,149	69,325
Capital Outlay	62,244	103,886	61,094
Debt Service	2,179	151,834	151,100
Total	**1,301,884**	**1,557,486**	**1,477,378**
Animal Control			
Salaries	71,984	123,640	124,336
Contractual	11,365	12,800	17,450
Commodities	2,221	9,100	8,050
Capital Outlay	13,019	8,465	4,816
Total	**98,589**	**154,005**	**154,652**
Civil Defense			
Salaries			
Contractual	7,161	11,050	7,000
Commodities			
Capital Outlay	6,080	10,300	6,650
Total	**13,241**	**21,350**	**13,650**
Streets and Roads			
Salaries	668,430	710,650	711,280
Contractual	17,760	29,240	21,740
Commodities	65,480	95,400	88,550
Capital Outlay	218,518	225,763	205,547
Total	**970,188**	**1,061,053**	**1,027,117**
Cemetery			
Salaries	169,987	188,640	181,568
Contractual	5,690	7,110	5,610
Commodities	9,719	5,100	5,650
Capital Outlay	26,416	51,110	56,270
Total	**211,812**	**251,960**	**249,098**
Airport			
Salaries	99,769	101,266	128,284
Contractual	48,672	70,850	67,500
Commodities	118,835	110,000	110,050
Capital Outlay	9,279	15,540	13,392
Total	**276,555**	**297,656**	**319,226**
Page 2 -Total	4,580,938	5,282,393	5,861,096
Page 1 -Total	**2,212,387**	**2,038,379**	**1,779,473**

(Note: Should agree with general sub-totals.)

City of Chanute 2021

Adopted Budget **General Fund - Detail Page 3**	Prior Year Actual for 2019	Current Year Estimate for 2020	Proposed Budget Year for 2021
Expenditures:			
Parks			
Salaries	269,337	223,316	220,044
Contractual	48,775	49,900	46,900
Commodities	94,150	50,100	49,600
Capital Outlay	40,516	83,726	66,694
Total	**452,778**	**407,042**	**383,238**
Swimming Pool			
Salaries	100,837	90,000	122,000
Contractual	71,660	36,750	36,750
Commodities	53,598	43,550	43,550
Capital Outlay		90,000	
Total	**226,095**	**260,300**	**202,300**
Baseball/Softball Parks			
Salaries			45,000
Contractual	340	26,913	5,000
Commodities	178,574	5,000	
Capital Outlay			
Total	**178,914**	**31,913**	**50,000**
Golf Course			
Salaries	193,955	180,820	185,988
Contractual	65,308	53,350	53,350
Commodities	61,613	92,200	92,200
Capital Outlay	36,671	19,686	68,657
Total	**357,547**	**346,056**	**400,195**
Tree Program			
Salaries			
Contractual	4,125	5,000	5,000
Commodities			
Capital Outlay			
Total	**4,125**	**5,000**	**5,000**
Auditorium Mgt Services			
Salaries	25,884	27,471	27,452
Contractual	2,926	9,450	9,100
Commodities	2,570	8,400	900
Capital Outlay	1,755	6,000	2,000
Total	**33,135**	**51,321**	**39,452**
Business Incubator			
Salaries			
Contractual			
Commodities			
Capital Outlay			
Total	**0**	**0**	**0**
Economic Development			
Salaries			
Contractual	60,000	2,000	2,000
Commodities			
Capital Outlay			
Total	**60,000**	**2,000**	**2,000**
Page 3 -Total	**1,312,594**	**1,103,632**	**1,082,185**
Page 2 -Total	**4,580,938**	**5,282,393**	**5,861,096**
Page 1 -Total	**2,212,387**	**2,038,379**	**1,779,473**
Grand Total	**8,105,919**	**8,424,404**	**8,722,754**

(Note: Should agree with general sub-totals.)

City of Chanute 2021

FUND PAGE FOR FUNDS WITH A TAX LEVY

Adopted Budget Debt Service	Prior Year Actual for 2019	Current Year Estimate for 2020	Proposed Budget Year for 2021
Unencumbered Cash Balance Jan 1	611,761	728,465	539,664
Receipts:			
Ad Valorem Tax	198,928	128,926	xxxxxxxxxxxxxxxx
Delinquent Tax	9,095	7,500	7,500
Motor Vehicle Tax	17,625	21,258	15,034
Recreational Vehicle Tax	171	168	135
16/20M Vehicle Tax	0	93	65
Commercial Vehicle Tax	452	644	357
Watercraft Tax	18,384	76	56
Rental Motor Vehicle Tax	4	0	
Special Assessments	9,000	9,000	
Use of Money and Property			
Bond Proceeds	4,594,562		
Operating Transfers from:			
General Fund	160,976	36,750	36,750
Electric Utility Fund	2,222,820	2,169,985	836,102
Water Utility Fund	100,000	178,500	172,897
Gas Utility Fund	5,830	6,316	6,560
Sewer Utility Fund	100,000	178,500	100,000
Less Bond Proceeds			
Interest on Idle Funds			
Neighborhood Revitalization Rebate	(5,397)	-7,614	-5,445
Miscellaneous			
Does miscellaneous exceed 10% Total Rec			
Total Receipts	7,432,450	2,730,102	1,170,011
Resources Available:	8,044,211	3,458,567	1,709,675
Expenditures:			
Debt Service			
Bond Principal	2,445,000	2,075,000	775,000
Bond Interest	280,557	291,903	299,075
Bond Issuance Costs	128,189		
Transfer to Electric	4,462,000		
Ash Grove Reserves			
Cash Basis Reserve		552,000	713,000
Cash Basis Reserve (2021 column)			
Miscellaneous			
Does miscellaneous exceed 10% Total Exp			
Total Expenditures	7,315,746	2,918,903	1,787,075
Unencumbered Cash Balance Dec 31	728,465	539,664	xxxxxxxxxxxxxxxx
2019/2020/2021 Budget Authority Amount	7,400,000	2,918,903	1,787,075
		Non-Appropriated Balance	
		Total Expenditure/Non-Appr Balance	1,787,075
		Tax Required	77,400
	Delinquent Comp Rate:	2.5%	1,912
		Amount of 2020 Ad Valorem Tax	79,312

Adopted Budget Library	Prior Year Actual for 2019	Current Year Estimate for 2020	Proposed Budget Year for 2021
Unencumbered Cash Balance Jan 1	0	0	2,265
Receipts:			
Ad Valorem Tax	275,440	381,143	xxxxxxxxxxxxxxxx
Delinquent Tax	15,589	7,500	7,500
Motor Vehicle Tax	44,818	44,366	44,443
Recreational Vehicle Tax	404	351	400
16/20M Vehicle Tax	177	195	193
Commercial Vehicle Tax	904	1,344	1,055
Watercraft Tax	38,373	158	166
Rental Motor Vehicle Tax	21		
Interest on Idle Funds			
Neighborhood Revitalization Rebate	(11,360)	-15,892	-16,094
Miscellaneous			
Does miscellaneous exceed 10% Total Rec			
Total Receipts	364,366	419,165	37,665
Resources Available:	364,366	419,165	39,930
Expenditures:			
Library Appropriations	364,366	416,900	412,000
Miscellaneous			
Does miscellaneous exceed 10% Total Exp			
Total Expenditures	364,366	416,900	412,000
Unencumbered Cash Balance Dec 31	0	2,265	xxxxxxxxxxxxxxxx
2019/2020/2021 Budget Authority Amount	428,350	416,900	412,000
		Non-Appropriated Balance	
		Total Expenditure/Non-Appr Balance	412,000
		Tax Required	372,070
	Delinquent Comp Rate:	2.5%	9,190
		Amount of 2020 Ad Valorem Tax	381,260

CPA Summary

City of Chanute 2021

FUND PAGE FOR FUNDS WITH A TAX LEVY

Adopted Budget **Library Employee Benefits**	Prior Year Actual for 2019	Current Year Estimate for 2020	Proposed Budget Year for 2021
Unencumbered Cash Balance Jan 1	1,520	0	3,429
Receipts:			
Ad Valorem Tax	49,142	73,073	xxxxxxxxxxxxxxxx
Delinquent Tax	2,525		
Motor Vehicle Tax	8,655	7,988	8,521
Recreational Vehicle Tax	78	63	77
16/20M Vehicle Tax	33	35	37
Commercial Vehicle Tax	177	242	202
Watercraft Tax	6,912	28	32
Rental Tax	3		
Interest on Idle Funds			
Neighborhood Revitalization Rebate	-2,070		-3,087
Miscellaneous			
Does miscellaneous exceed 10% Total Re			
Total Receipts	65,455	81,429	5,782
Resources Available:	66,975	81,429	9,211
Expenditures:			
Library Appropriations	66,975	78,000	78,000
Cash Forward (2021 column)			
Miscellaneous			
Does miscellaneous exceed 10% Total Ex			
Total Expenditures	66,975	78,000	78,000
Unencumbered Cash Balance Dec 31	0	3,429	xxxxxxxxxxxxxxxx
2019/2020/2021 Budget Authority Amoun	78,000	78,000	78,000
		Non-Appropriated Balance	
		Total Expenditure/Non-Appr Balance	78,000
		Tax Required	68,789
	Delinquent Comp Rate:	2.5%	1,699
		Amount of 2020 Ad Valorem Tax	70,488

Adopted Budget **Employee Benefits**	Prior Year Actual for 2019	Current Year Estimate for 2020	Proposed Budget Year for 2021
Unencumbered Cash Balance Jan 1	645,685	322,537	118,335
Receipts:			
Ad Valorem Tax	492,711	768,574	xxxxxxxxxxxxxxxx
Delinquent Tax	35,094	20,000	20,000
Motor Vehicle Tax	99,493	84,402	89,624
Recreational Vehicle Tax	894	667	807
16/20M Vehicle Tax	409	371	390
Commercial Vehicle Tax	1,985	2,557	2,128
Watercraft Tax	72,993	301	335
Rental Motor Vehicle Tax	37	0	
Reimbursed Expenses	23,312	2,500	45,000
Interest on Idle Funds	4,795		
Neighborhood Revitalization Rebate	-21,844	-30,231	-32,451
Miscellaneous			
Does miscellaneous exceed 10% Total Re			
Total Receipts	709,879	849,141	125,833
Resources Available:	1,355,564	1,171,678	244,168
Expenditures:			
Employee Benefits	1,033,027	1,053,343	1,178,379
Cash Basis Reserves			
Cash Forward (2021 column)			
Miscellaneous			
Does miscellaneous exceed 10% Total Ex			
Total Expenditures	1,033,027	1,053,343	1,178,379
Unencumbered Cash Balance Dec 31	322,537	118,335	xxxxxxxxxxxxxxxx
2019/2020/2021 Budget Authority Amoun	1,626,094	1,403,343	1,178,379
		Non-Appropriated Balance	
		Total Expenditure/Non-Appr Balance	1,178,379
		Tax Required	934,211
	Delinquent Comp Rate:	2.5%	23,075
		Amount of 2020 Ad Valorem Tax	957,286

CPA Summary

City of Chanute 2021

FUND PAGE FOR FUNDS WITH A TAX LEVY

Adopted Budget Special Liability	Prior Year Actual for 2019	Current Year Estimate for 2020	Proposed Budget Year for 2021
Unencumbered Cash Balance Jan 1	353,865	344,691	269,691
Receipts:			
Ad Valorem Tax		0	xxxxxxxxxxxxxxxxxx
Delinquent Tax			
Motor Vehicle Tax			
Recreational Vehicle Tax			
16/20M Vehicle Tax			
Commercial Vehicle Tax			
Watercraft Tax			
Interest on Idle Funds	7,487		
Neighborhood Revitalization Rebate			0
Miscellaneous			
Does miscellaneous exceed 10% Total Re			
Total Receipts	**7,487**	**0**	**0**
Resources Available:	**361,352**	**344,691**	**269,691**
Expenditures:			
Contractual Services	16,661	75,000	75,000
Cash Forward (2021 column)			
Miscellaneous			
Does miscellaneous exceed 10% Total Ex			
Total Expenditures	**16,661**	**75,000**	**75,000**
Unencumbered Cash Balance Dec 31	344,691	269,691	xxxxxxxxxxxxxxxxxx
2019/2020/2021 Budget Authority Amoun	75,000	75,000	75,000
		Non-Appropriated Balance	
		Total Expenditure/Non-Appr Balance	75,000
		Tax Required	0
	Delinquent Comp Rate:	2.5%	0
		Amount of 2020 Ad Valorem Tax	0

Adopted Budget .25 Sales Tax- CRDA/City	Prior Year Actual for 2019	Current Year Estimate for 2020	Proposed Budget Year for 2021
Unencumbered Cash Balance Jan 1	0	184,390	184,390
Receipts:			
Ad Valorem Tax		0	xxxxxxxxxxxxxxxxxx
Delinquent Tax			
Motor Vehicle Tax			
Recreational Vehicle Tax			
16/20M Vehicle Tax			
Commercial Vehicle Tax			
Watercraft Tax			
Sales Tax	375,686	480,000	600,000
Interest on Idle Funds			
Neighborhood Revitalization Rebate			0
Miscellaneous			
Does miscellaneous exceed 10% Total Re			
Total Receipts	**375,686**	**480,000**	**600,000**
Resources Available:	**375,686**	**664,390**	**784,390**
Expenditures:			
Contractual Services	191,296	480,000	600,000
Cash Forward (2021 column)			
Miscellaneous			
Does miscellaneous exceed 10% Total Ex			
Total Expenditures	**191,296**	**480,000**	**600,000**
Unencumbered Cash Balance Dec 31	184,390	184,390	xxxxxxxxxxxxxxxxxx
2019/2020/2021 Budget Authority Amoun	250,000	480,000	600,000
		Non-Appropriated Balance	
		Total Expenditure/Non-Appr Balance	600,000
		Tax Required	0
	Delinquent Comp Rate:	2.5%	0
		Amount of 2020 Ad Valorem Tax	0

CPA Summary

City of Chanute 2021

FUND PAGE FOR FUNDS WITH NO TAX LEVY

Adopted Budget **Special Highway**	Prior Year Actual for 2019	Current Year Estimate for 2020	Proposed Budget Year for 2021
Unencumbered Cash Balance Jan 1	631,981	638,104	292,551
Receipts:			
State of Kansas Gas Tax	247,487	232,390	204,640
County Transfers Gas		0	0
Interest on Idle Funds			
Miscellaneous			
Does miscellaneous exceed 10% Total Rec			
Total Receipts	**247,487**	**232,390**	**204,640**
Resources Available:	**879,468**	**870,494**	**497,191**
Expenditures:			
General Government			
Personal Services	74,774	88,377	90,810
Contractual	8,035		
Commodities	15,464		
Capital Outlay	84,825	475,000	405,000
Debt Service			
Principal	57,158	14,507	
Interest	1,108	59	
Cash Forward (2021 column)			
Miscellaneous			
Does miscellaneous exceed 10% Total Exp			
Total Expenditures	**241,364**	**577,943**	**495,810**
Unencumbered Cash Balance Dec 31	638,104	292,551	1,381
2019/2020/2021 Budget Authority Amount	533,286	577,943	495,810

Adopted Budget

Industrial	Prior Year Actual for 2019	Current Year Estimate for 2020	Proposed Budget Year for 2021
Unencumbered Cash Balance Jan 1	188,573	193,753	197,253
Receipts:			
Charges for Services			
Landfill Fees-Tires	5,180	3,500	3,500
Miscellaneous Revenue			
Interest on Idle Funds			
Miscellaneous			
Does miscellaneous exceed 10% Total Rec			
Total Receipts	**5,180**	**3,500**	**3,500**
Resources Available:	**193,753**	**197,253**	**200,753**
Expenditures:			
Cash Forward (2021 column)			
Miscellaneous			
Does miscellaneous exceed 10% Total Exp			
Total Expenditures	**0**	**0**	**0**
Unencumbered Cash Balance Dec 31	193,753	197,253	200,753
2019/2020/2021 Budget Authority Amount	0	0	0

CPA Summary

City of Chanute 2021

FUND PAGE FOR FUNDS WITH NO TAX LEVY

Adopted Budget **Recreation Complex**	Prior Year Actual for 2019	Current Year Estimate for 2020	Proposed Budget Year for 2021
Unencumbered Cash Balance Jan 1	112,168	104,103	105,103
Receipts:			
Taxes and Shared Receipts			
Rents and Royalties	42,000	43,500	43,500
Interest on Idle Funds			
Miscellaneous			
Does miscellaneous exceed 10% Total Rec			
Total Receipts	**42,000**	**43,500**	**43,500**
Resources Available:	**154,168**	**147,603**	**148,603**
Expenditures:			
Contractual Services	50,065	42,500	42,500
Cash Forward (2021 column)			
Miscellaneous			
Does miscellaneous exceed 10% Total Exp			
Total Expenditures	**50,065**	**42,500**	**42,500**
Unencumbered Cash Balance Dec 31	104,103	105,103	106,103
2019/2020/2021 Budget Authority Amoun	65,000	42,500	42,500

Adopted Budget

Special Parks & Rec.	Prior Year Actual for 2019	Current Year Estimate for 2020	Proposed Budget Year for 2021
Unencumbered Cash Balance Jan 1	30,862	36,118	36,118
Receipts:			
Taxes and Shared Receipts			
Local Alcoholic Liqour Tax	24,270	21,330	27,371
Intergovernmental			
State Grants	2,493		
Fines, Forfeitures, and Penalties			
Fines- Court Fees	5,020		
Interest on Idle Funds	473		
Miscellaneous			
Does miscellaneous exceed 10% Total Rec			
Total Receipts	**32,256**	**21,330**	**27,371**
Resources Available:	**63,118**	**57,448**	**63,489**
Expenditures:			
Special Parks & Rec			
Salaries			
Contractual			
Capital Outlay	27,000	21,330	27,371
Cash Forward (2021 column)			
Miscellaneous			
Does miscellaneous exceed 10% Total Exp			
Total Expenditures	**27,000**	**21,330**	**27,371**
Unencumbered Cash Balance Dec 31	36,118	36,118	36,118
2019/2020/2021 Budget Authority Amoun	27,100	21,330	27,371

CPA Summary

City of Chanute 2021

FUND PAGE FOR FUNDS WITH NO TAX LEVY

Adopted Budget **Special Alcohol Program**	Prior Year Actual for 2019	Current Year Estimate for 2020	Proposed Budget Year for 2021
Unencumbered Cash Balance Jan 1	51,834	62,878	63,443
Receipts:			
Taxes and Shared Receipts			
Local Alcoholic Liquor Tax	24,774	21,330	27,371
Other Receipts			
Donations			
Interest on Idle Funds			
Miscellaneous			
Does miscellaneous exceed 10% Total Rec			
Total Receipts	**24,774**	**21,330**	**27,371**
Resources Available:	**76,608**	**84,208**	**90,814**
Expenditures:			
Culture and Recreation			
Salaries	4,976	10,765	10,765
Contractual	1,323	8,000	12,000
Commodities	7,308		
Capital Outlay	123	2,000	2,000
Cash Forward (2021 column)			
Miscellaneous			
Does miscellaneous exceed 10% Total Exp			
Total Expenditures	**13,730**	**20,765**	**24,765**
Unencumbered Cash Balance Dec 31	62,878	63,443	66,049
2019/2020/2021 Budget Authority Amoun	26,765	20,765	24,765

Adopted Budget

Tourism & Convention	Prior Year Actual for 2019	Current Year Estimate for 2020	Proposed Budget Year for 2021
Unencumbered Cash Balance Jan 1	159,834	274,968	314,968
Receipts:			
Taxes and Shared Receipts			
Transient Guest Tax	163,080	130,000	140,000
Interest on Idle Funds	1,054		
Miscellaneous			
Does miscellaneous exceed 10% Total Rec			
Total Receipts	**164,134**	**130,000**	**140,000**
Resources Available:	**323,968**	**404,968**	**454,968**
Expenditures:			
General Government			
Contractual Services	49,000	90,000	140,000
Commodities			
Capital Outlay			
Cash Forward (2021 column)			
Miscellaneous			
Does miscellaneous exceed 10% Total Exp			
Total Expenditures	**49,000**	**90,000**	**140,000**
Unencumbered Cash Balance Dec 31	274,968	314,968	314,968
2019/2020/2021 Budget Authority Amoun	90,000	90,000	140,000

CPA Summary

City of Chanute 2021

FUND PAGE FOR FUNDS WITH NO TAX LEVY

Adopted Budget 0	Prior Year Actual for 2019	Current Year Estimate for 2020	Proposed Budget Year for 2021
Unencumbered Cash Balance Jan 1		0	0
Receipts:			
Interest on Idle Funds			
Miscellaneous			
Does miscellaneous exceed 10% Total Rec			
Total Receipts	0	**0**	**0**
Resources Available:	0	**0**	**0**
Expenditures:			
Cash Forward (2021 column)			
Miscellaneous			
Does miscellaneous exceed 10% Total Exp			
Total Expenditures	**0**	**0**	**0**
Unencumbered Cash Balance Dec 31	0	0	0
2019/2020/2021 Budget Authority Amount	0	0	0

Adopted Budget

Special Obligation (TIF)	Prior Year Actual for 2019	Current Year Estimate for 2020	Proposed Budget Year for 2021
Unencumbered Cash Balance Jan 1	12,517	12,569	12,569
Receipts:			
Use of Money and Property			
Interest Income			
Operating Transfers- General Fund	58,850	58,900	58,900
Interest on Idle Funds			
Miscellaneous			
Does miscellaneous exceed 10% Total Rec			
Total Receipts	**58,850**	**58,900**	**58,900**
Resources Available:	**71,367**	**71,469**	**71,469**
Expenditures:			
Debt Service			
Bond Principal	40,000	42,000	44,000
Bond Interest	17,738	15,840	13,840
Debt Service Cost	1,060	1,060	1,060
Cash Forward (2021 column)			
Miscellaneous			
Does miscellaneous exceed 10% Total Exp			
Total Expenditures	**58,798**	**58,900**	**58,900**
Unencumbered Cash Balance Dec 31	12,569	12,569	12,569
2019/2020/2021 Budget Authority Amount	58,820	58,900	58,900

CPA Summary

City of Chanute 2021

FUND PAGE FOR FUNDS WITH NO TAX LEVY

Adopted Budget Electric	Prior Year Actual for 2019	Current Year Estimate for 2020	Proposed Budget Year for 2021
Unencumbered Cash Balance Jan 1	1,949,251	4,260,223	4,296,285
Receipts:			
Taxes and Shared Receipts			
Electric Sales	19,811,257	21,710,900	21,605,900
Service Fees	804,361	780,000	805,000
Franchise Fees	325,716	335,000	335,000
Use of Money and Materials			
Sale of Property and Materials	6,479	5,000	5,000
Other Receipts			
Claims	7,471		
Recovery of Bad Debt	-11,334	2,500	2,500
Miscellaneous	19,939	17,000	22,500
Refunds & Reimbursements	119,826	5,000	25,000
Security Deposit Returned			
Generation Reimbursement	5,658,614	5,500,000	6,000,000
Interest on Idle Funds	11,550	20,000	10,000
Miscellaneous			
Does miscellaneous exceed 10% Total Rec			
Total Receipts	26,753,679	28,375,400	28,810,900
Resources Available:	28,702,930	32,635,623	33,107,185
Expenditures:			
Production			
Personal Services	1,741,349	1,741,829	1,855,556
Contractual Services	299,579	434,750	390,700
Commodities	10,555,291	15,995,500	16,325,000
Capital Outlay	165,286	115,000	115,000
Distribution			
Personal Services	1,267,008	1,367,527	1,374,005
Contractual Services	66,934	112,150	110,850
Commodities	518,622	821,400	663,600
Capital Outlay	282,902	65,000	471,000
Administration and General			
Personal Services	75,550	53,777	113,143
Contractual Services	1,266,668	1,233,740	1,247,354
Street and Special Lighting			
Contractual Services	97,656	110,000	100,000
Operating Transfers to:			
General Fund	2,250,000	2,500,000	2,500,000
Capital Improvement #1Fund	100,000	200,000	200,000
Capital Improvement #2 Fund			
General Obligation Bond & Interest Fund	2,222,820	2,169,485	835,602
Equipmet Reserve Fund	200,000	200,000	200,000
Electric, Wtr, & Gas Bond & Interest FD	861,130	879,150	2,122,620
Ash Grove Franchise Fee to General FD	325,716	330,000	330,000
Other Transfer	2,146,138		
Cash Forward (2021 column)			
Miscellaneous			
Does miscellaneous exceed 10% Total Ex			
Total Expenditures	24,442,707	28,339,338	28,954,330
Unencumbered Cash Balance Dec 31	4,260,223	4,296,285	4,152,855
2019/2020/2021 Budget Authority Amoun	24,668,039	28,339,338	28,954,330

Adopted Budget

Water	Prior Year Actual for 2019	Current Year Estimate for 2020	Proposed Budget Year for 2021
Unencumbered Cash Balance Jan 1	420,296	283,934	111,670
Receipts:			
Taxes and Shared Receipts			
Water Sales	1,641,043	1,845,300	1,973,500
Use of Money and Property			
Sale of Property and Materials	1,072		
Other Receipts			
Claims	483		
Recovery of Bad Debt	-1,969		
Refunds & Reimbursements			
Miscellaneous	13,319	12,500	12,500
Interest on Idle Funds			
Miscellaneous			
Does miscellaneous exceed 10% Total Rec			
Total Receipts	1,653,948	1,857,800	1,986,000
Resources Available:	2,074,244	2,141,734	2,097,670
Expenditures:			
Source of Supply			
Commodities	20,387	19,000	20,000
Treatment Plant			
Personal Services	429,163	440,618	413,583
Contractual Services	139,632	126,300	145,420
Commodities	215,933	226,500	222,600
Capital Outlay	2,128	1,500	1,500
Debt Service			
Transmission and Distribution			
Personal Services	373,769	374,940	378,476
Contractual Services	26,822	39,900	39,900
Commodities	98,618	141,500	48,500
Administration and General			
Personal Services	68,025	68,777	108,143
Contractual Services	128,913	125,210	111,564
Commodities			
Debt Service - Revolving Loan			
Principal	19,989	20,574	57,240
Interest/Service Fees	11,931	11,345	28,334
Operating Transfers to:			
General Fund	80,000	80,000	80,000
Capital Improvement #1 Fund	50,000	175,500	100,000
General Obligation Bond & Interest Fund	100,000	125,000	172,897
Equipment Reserve Fund	25,000	50,000	50,000
Cash Forward (2021 column)			
Miscellaneous			
Does miscellaneous exceed 10% Total Ex			
Total Expenditures	1,790,310	2,030,064	1,978,157
Unencumbered Cash Balance Dec 31	283,934	111,670	119,513
2019/2020/2021 Budget Authority Amoun	1,873,633	2,030,064	1,978,157

CPA Summary

City of Chanute 2021

FUND PAGE FOR FUNDS WITH NO TAX LEVY

Adopted Budget Gas	Prior Year Actual for 2019	Current Year Estimate for 2020	Proposed Budget Year for 2021
Unencumbered Cash Balance Jan 1	737,756	1,597,856	1,788,539
Receipts:			
Taxes and Shared Receipts			
Gas Sales	6,404,418	6,945,000	7,086,500
Service Fees	1,765	4,000	2,000
Use of Money and Property			
Sale of Property and Materials	1,770	3,000	3,000
Other Receipts			
Claims			
Recovery of Bad Debts	-3,564	500	500
Refunds			
Transfer From Electric			
Interest on Idle Funds	5,240	3,500	3,500
Miscellaneous	1,354		1,500
Does miscellaneous exceed 10% Total Rec			
Total Receipts	6,410,983	6,956,000	7,097,000
Resources Available:	7,148,739	8,553,856	8,885,539
Expenditures:			
Gas Supply			
Transportation	1,005,534	925,000	1,150,000
Natural Gas	2,889,000	3,975,000	3,800,000
Distribution			
Personal Services	644,623	754,315	754,987
Contractual Services	144,992	124,850	124,900
Commodities	108,186	114,000	114,250
Capital Outlay	15,132	45,000	25,000
Administration and General			
Personal Services	54,283	63,276	87,641
Contractual Services	242,173	278,880	272,859
Operating Transfers to:			
General Fund	200,000	200,000	250,000
Capital Improvement #1 Fund			100,000
Capital Improvement #2 Fund			
General Obligation Band & Interest Fund	246,960	284,996	307,095
Equipment Reserve Fund			100,000
Cash Forward (2021 column)			
Miscellaneous			
Does miscellaneous exceed 10% Total Exp			
Total Expenditures	5,550,883	6,765,317	7,086,732
Unencumbered Cash Balance Dec 31	1,597,856	1,788,539	1,798,807
2019/2020/2021 Budget Authority Amoun	7,500,000	6,765,317	7,086,732

Adopted Budget

Refuse	Prior Year Actual for 2019	Current Year Estimate for 2020	Proposed Budget Year for 2021
Unencumbered Cash Balance Jan 1	194,781	78,131	153,075
Receipts:			
Taxes and Shared Receipts			
Utility Collections	903,082	1,021,787	1,144,000
Landfill Fees	197,326	175,000	250,000
Use of Money and Property			
Sale of Property and Materials			
Other Receipts			
Recovery of Bad Debt	-1,891	200	200
Refuse Licenses & Permits	525	400	1,000
Miscellaneous		100,000	
Interest on Idle Funds			
Miscellaneous			
Does miscellaneous exceed 10% Total Rec			
Total Receipts	1,099,042	1,297,387	1,395,200
Resources Available:	1,293,823	1,375,518	1,548,275
Expenditures:			
Collections			
Personal Services	354,644	377,255	382,503
Contractual Services	6,102	9,450	9,650
Commodities	16,482	21,750	24,450
Refuse Landfill			
Personal Services	221,466	229,835	246,893
Contractual Services	70,943	61,985	86,200
Commodities	83,803	74,650	93,050
Capital Outlay	35,200		500
Lnadfill Closing Reserve Fund	10,000	10,000	10,000
Administration and General			
Personal Services	64,215	68,773	103,140
Contractual Services	173,675	185,730	232,125
Commodities			
Operating Transfers To:			
General Fund	50,000	50,000	50,000
Capital Improvement #2 Fund			
General Obligation Bond & Interest Fund	30,500	33,015	33,015
Equipment Reserve Fund			
Landfill Bond and Interest Fund			
Other Transfer	98,662	100,000	100,000
Cash Forward (2021 column)			
Miscellaneous			
Does miscellaneous exceed 10% Total Exp			
Total Expenditures	1,215,692	1,222,443	1,371,526
Unencumbered Cash Balance Dec 31	78,131	153,075	176,749
2019/2020/2021 Budget Authority Amoun	1,250,000	1,367,445	1,371,526

CPA Summary

City of Chanute 2021

FUND PAGE FOR FUNDS WITH NO TAX LEVY

Adopted Budget Wastewater	Prior Year Actual for 2019	Current Year Estimate for 2020	Proposed Budget Year for 2021
Unencumbered Cash Balance Jan 1	57	144,641	129,337
Receipts:			
Taxes and Shared Receipts			
Sewer Sales	2,142,710	2,432,500	2,160,500
Service Fees	475		500
Other Receipts			
Refunds & Reimbursements	1,173		
Recovery of Bad Debts	-4,263		
Miscellaneous	2,492	2,500	2,500
Reimbursement From I & I Fund	134,860	150,000	200,000
Interest on Idle Funds			
Miscellaneous			
Does miscellaneous exceed 10% Total Rec			
Total Receipts	2,277,447	2,585,000	2,363,500
Resources Available:	2,277,504	2,729,641	2,492,837
Expenditures:			
Collections			
Personal Services	208,091	268,498	228,462
Contractual Services	16,352	4,100	14,100
Commodities	43,835	26,000	26,000
Pumping			
Contractual Services	26,902	7,800	7,800
Commodities	2,679	25,000	50,000
Treatment and Disposal			
Personal Services	446,098	455,044	459,395
Contractual Services	146,144	190,800	209,550
Commodities	102,575	80,750	108,700
Capital Outlay	1,574		
Storm Drainage			
Contractual Services	1,045	3,000	5,000
Commodities	31,757	70,000	74,500
Capital Outlay			
Administration and General			
Personal Services	52,955	63,775	88,139
Contractual Services	116,213	111,540	118,572
Debt Service- Revolving Loan			
Principal	69,692	188,221	192,456
Interest	19,591	90,776	86,543
Operating Transfers To:			
General Fund	62,500	65,000	65,000
Capital Improvement #1 Fund			
Capital Improvement #2 Fund			
General Obligation Bond & Interest Fund	100,000	100,000	100,000
I & I Sewer Project Reserve Fund	684,860	850,000	550,000
Equipment Reserve Fund			
Cash Forward (2021 column)			
Miscellaneous			
Does miscellaneous exceed 10% Total Exp			
Total Expenditures	2,132,863	2,600,304	2,384,217
Unencumbered Cash Balance Dec 31	144,641	129,337	108,620
2019/2020/2021 Budget Authority Amount	2,375,414	2,600,304	2,384,217

Adopted Budget

Fiber	Prior Year Actual for 2019	Current Year Estimate for 2020	Proposed Budget Year for 2021
Unencumbered Cash Balance Jan 1	276,745	356,080	32,626
Receipts:			
Communications - Services		25,000	
Comm. Services	1,500		1,500
Fiber- Residential Sales	4,560	175,000	206,100
Fiber- Commercial Sales	268,644	400,000	268,000
Fiber- Industrial Sales	34,926	50,000	35,000
Reimbursements	653		2,000
Transfer	300,000		
Interest on Idle Funds			
Miscellaneous			
Does miscellaneous exceed 10% Total Rec			
Total Receipts	610,283	650,000	512,600
Resources Available:	887,028	1,006,080	545,226
Expenditures:			
Personal Services			91,187
Contractual Services	201,294	800,500	144,000
Commodities	158,355	40,100	48,000
Capital Outlay	171,299	132,854	62,178
Debt Service			
Cash Forward (2021 column)			
Miscellaneous			
Does miscellaneous exceed 10% Total Exp			
Total Expenditures	530,948	973,454	345,365
Unencumbered Cash Balance Dec 31	356,080	32,626	199,861
2019/2020/2021 Budget Authority Amount	976,500	973,454	345,365

CPA Summary

City of Chanute 2021

FUND PAGE FOR FUNDS WITH NO TAX LEVY

Adopted Budget **Ele/Wtr/Gas Bond & Interest**	Prior Year Actual for 2019	Current Year Estimate for 2020	Proposed Budget Year for 2021
Unencumbered Cash Balance Jan 1	249,911	269,936	352,276
Receipts:			
Taxes and Shared Receipts			
Electric Utility Fund	861,130	778,680	2,122,620
Gas Utility Fund	241,130	378,680	307,095
Refuse Utitlity Fund	30,500	33,015	33,015
Bonds Proceeds			
Interest on Idle Funds			
Miscellaneous			
Does miscellaneous exceed 10% Total Rec			
Total Receipts	**1,132,760**	**1,190,375**	**2,462,730**
Resources Available:	**1,382,671**	**1,460,311**	**2,815,006**
Expenditures:			
Debt Service			
Bond Pricipal	985,000	1,000,000	2,140,000
Bond Interest	127,735	108,035	170,000
Bond Issuance Cost			
Cash Forward (2021 column)			
Miscellaneous			
Does miscellaneous exceed 10% Total Exp			
Total Expenditures	**1,112,735**	**1,108,035**	**2,310,000**
Unencumbered Cash Balance Dec 31	269,936	352,276	505,006
2019/2020/2021 Budget Authority Amount	1,112,735	1,108,035	2,310,000

Adopted Budget

0	Prior Year Actual for 2019	Current Year Estimate for 2020	Proposed Budget Year for 2021
Unencumbered Cash Balance Jan 1		0	0
Receipts:			
Interest on Idle Funds			
Miscellaneous			
Does miscellaneous exceed 10% Total Rec			
Total Receipts	**0**	**0**	**0**
Resources Available:	**0**	**0**	**0**
Expenditures:			
Cash Forward (2021 column)			
Miscellaneous			
Does miscellaneous exceed 10% Total Exp			
Total Expenditures	**0**	**0**	**0**
Unencumbered Cash Balance Dec 31	0	0	0
2019/2020/2021 Budget Authority Amount	0	0	0

CPA Summary

City of Chanute

NON-BUDGETED FUNDS (A)

(Only the actual budget year for 2019 is to be shown)

2021

Non-Budgeted Funds-A

(1) Fund Name:		(2) Fund Name:		(3) Fund Name:		(4) Fund Name:		(5) Fund Name:		
Cap Imp I		**Cap Imp II**		**Equipment Reserve**		**Efficiency KS Grant**		**Grant Fund**		
Unencumbered		Unencumbered		Unencumbered		Unencumbered		Unencumbered		Total
Cash Balance Jan 1	430,287	Cash Balance Jan 1	215,345	Cash Balance Jan 1	218,386	Cash Balance Jan 1	369	Cash Balance Jan 1	-33,545	830,842
Receipts:	-1,192,614	Receipts:		Receipts:		Receipts:		Receipts:		
Electric Fund	100,000	Sale of Proptery/Material		Sale of Property	11400	Taxes/Shared		Taxes/Shared		
Gas Fund		Sale of Osa Martin Pr.	6,250	Capital Lease Proceeds		Utility Collections	8,015	Federal Grant	82,687	
Water Fund	50,000	Operating Transfers From:		Operating Transfers From:		Service Fees	286	Federal - ESG		
Sewer Fund		General Fund	8,486	General Fund				State Grants - E Rate	23,400	
Interest on Investment	10,076	Electric Fund		Electric Fund	200,000			Capital Imp #2		
State Loan	616,026	Gas Fund		Gas Fund				Donations	30,000	
		Other Funds	60,000	Water Fund	25,000					
		Interst on Investment	35,066							
Total Receipts	776,102	Total Receipts	109,802	Total Receipts	236,400	Total Receipts	8,301	Total Receipts	136,087	1,266,692
Resources Available:	1,206,389	Resources Available:	325,147	Resources Available:	454,786	Resources Available:	8,670	Resources Available:	102,542	2,097,534
Expenditures:		Expenditures:		Expenditures:		Expenditures:		Expenditures:		
Capital Outlay	865,245	Capital Outlay	215,538	Capital Outlay	44,971	Contractual Services	8,255	Capital Outlay	112,399	
Debt Service	2,175	Transfer Grant Fund								
Total Expenditures	867,420	Total Expenditures	215,538	Total Expenditures	44,971	Total Expenditures	8,255	Total Expenditures	112,399	1,248,583
Cash Balance Dec 31	338,969	Cash Balance Dec 31	109,609	Cash Balance Dec 31	409,815	Cash Balance Dec 31	415	Cash Balance Dec 31	-9,857	**848,951**
								10-1116 applies	See Tab B	**848,951**

**Note: These two block figures should agree.

CPA Summary

City of Chanute

NON-BUDGETED FUNDS (B)

(Only the actual budget year for 2019 is to be shown)

2021

Non-Budgeted Funds-B

(1) Fund Name:		(2) Fund Name:		(3) Fund Name:		(4) Fund Name:		(5) Fund Name:		
I&I Sewer Fund		**lectric/Wtr/Gas Bond Re**		**Vehicle Services Fund**		**Utility Services Fund**		**ublic Works/Complex Fun**		
Unencumbered		Unencumbered		Unencumbered		Unencumbered		Unencumbered		Total
Cash Balance Jan 1	1,192,614	Cash Balance Jan 1	249,911	Cash Balance Jan 1	15,355	Cash Balance Jan 1	64,585	Cash Balance Jan 1	12,038	1,534,503
Receipts:		Receipts:		Receipts:		Receipts:		Receipts:		
Operating Transfer		Operating Transfer		Charges for Services	770,000	Internal Charges	1,250,000	Internal Charges	226,000	
Sewer Fund	684,860	Gas Fund	241,130	Internal Charges		Initation Fee	20,409	Other Receipts		
		Refuse Fund	30,500	Use of Money/Property		Reconnection Fees	6,085	Miscellaneous		
		Electric Fund	861,130	Sale of Property		Late Payment Fees	145,751			
				Other Receipts	2,843	Bad Check Charges	2,070			
				Miscellaneous	102	Other Receipts	146			
						Recovery of Bad Check	-8,578			
						Miscellaneous	143			
Total Receipts	684,860	Total Receipts	1,132,760	Total Receipts	772,945	Total Receipts	1,416,026	Total Receipts	226,000	4,232,591
Resources Available:	1,877,474	Resources Available:	1,382,671	Resources Available:	788,300	Resources Available:	1,480,611	Resources Available:	238,038	5,767,094
Expenditures:		Expenditures:		Expenditures:		Expenditures:		Expenditures:		
Personal Services		Debt Services		Personal Services	215,188	Utility Office	379,289	Public Works	6,507	
Contractual	58,094	Bond Principal	985,000	Contractual Services	115,578	Utility Admin	335,956	Personal Services	107,946	
Commodities	10,327	Bond Interest	127,735	Commodities	347,371	Data Processing	434,053	Contractual Services	59,615	
Capital Outlay	144,260			Capital Outlay	62,934	Meter Reading	204,561	Commodities	14,426	
						Information Service	27,765			
Total Expenditures	212,681	Total Expenditures	1,112,735	Total Expenditures	741,071	Total Expenditures	1,381,624	Total Expenditures	188,494	3,636,605
Cash Balance Dec 31	1,664,793	Cash Balance Dec 31	269,936	Cash Balance Dec 31	47,229	Cash Balance Dec 31	98,987	Cash Balance Dec 31	49,544	2,130,489
										2,130,489

**Note: These two block figures should agree.

CPA Summary

City of Chanute

NON-BUDGETED FUNDS (C)

(Only the actual budget year for 2019 is to be shown)

2021

Non-Budgeted Funds-C

(1) Fund Name:		(2) Fund Name:		(3) Fund Name:		(4) Fund Name:		(5) Fund Name:		
Maint-Gen/Sub Stn Rep										
Unencumbered		Unencumbered		Unencumbered		Unencumbered		Unencumbered		Total
Cash Balance Jan 1	0	Cash Balance Jan 1		Cash Balance Jan 1		Cash Balance Jan 1		Cash Balance Jan 1		0
Receipts:		Receipts:		Receipts:		Receipts:		Receipts:		
Transfer										
Electric	1,500,000									
Bond/Interst	4,462,000									
Total Receipts	5,962,000	Total Receipts	0	Total Receipts	0	Total Receipts	0	Total Receipts	0	5,962,000
Resources Available:	5,962,000	Resources Available:	0	Resources Available:	0	Resources Available:	0	Resources Available:	0	5,962,000
Expenditures:		Expenditures:		Expenditures:		Expenditures:		Expenditures:		
Contractual	4,746,068									
Total Expenditures	4,746,068	Total Expenditures	0	Total Expenditures	0	Total Expenditures	0	Total Expenditures	0	4,746,068
Cash Balance Dec 31	1,215,932	Cash Balance Dec 31	0	Cash Balance Dec 31	0	Cash Balance Dec 31	0	Cash Balance Dec 31	0	1,215,932
										1,215,932

**Note: These two block figures should agree.

CPA Summary

NOTICE OF BUDGET HEARING

2021

The governing body of
City of Chanute
will meet on August 10, 2020 at 6:30 P.M. at City Commission Room for the purpose of hearing and answering objections of taxpayers relating to the proposed use of all funds and the amount of ad valorem tax.
Detailed budget information is available at City Managers Office and will be available at this hearing.

BUDGET SUMMARY

Proposed Budget 2021 Expenditures and Amount of 2020 Ad Valorem Tax establish the maximum limits of the 2021 budget.
Estimated Tax Rate is subject to change depending on the final assessed valuation.

	Prior Year Actual for 2019		Current Year Estimate for 2020		Proposed Budget Year for 2021		
FUND	Expenditures	Actual Tax Rate *	Expenditures	Actual Tax Rate *	Budget Authority for Expenditures	Amount of 2020 Ad Valorem Tax	Estimate Tax Rate *
General	8,105,919	18.678	8,424,404	19.571	8,722,754	1,096,154	17.406
Debt Service	7,315,746	2.979	2,918,903	2.048	1,787,075	79,312	1.259
Library	364,366	6.218	416,900	6.053	412,000	381,260	6.054
Library Employee Benefits	66,975	1.120	78,000	1.161	78,000	70,488	1.119
Employee Benefits	1,033,027	11.828	1,053,343	12.205	1,178,379	957,286	15.201
Special Liability	16,661		75,000		75,000		
.25 Sales Tax- CRDA/City	191,296		480,000		600,000		
Special Highway	241,364		577,943		495,810		
Industrial							
Recreation Complex	50,065		42,500		42,500		
Special Parks & Rec.	27,000		21,330		27,371		
Special Alcohol Program	13,730		20,765		24,765		
Tourism & Convention	49,000		90,000		140,000		
Special Obligation (TIF)	58,798		58,900		58,900		
Electric	24,442,707		28,339,338		28,954,330		
Water	1,790,310		2,030,064		1,978,157		
Gas	5,550,883		6,765,317		7,086,732		
Refuse	1,215,692		1,222,443		1,371,526		
Wastewater	2,132,863		2,600,304		2,384,217		
Fiber	530,948		973,454		345,365		
Ele/Wtr/Gas Bond & Interes	1,112,735		1,108,035		2,310,000		
Non-Budgeted Funds-A	1,248,583						
Non-Budgeted Funds-B	3,636,605						
Non-Budgeted Funds-C	4,746,068						
Totals	63,941,341	40.823	57,296,943	41.038	58,072,881	2,584,500	41.039
Less: Transfers	7,917,974		8,498,326		8,438,879		
Net Expenditure	56,023,367		48,798,617		49,634,002		
Total Tax Levied	2,525,004		2,584,194		xxxxxxxxxxxxxxxxx		
Assessed Valuation	61,857,080		62,975,166		62,976,795		

Outstanding Indebtedness, January 1,	2018	2019	2020
G.O. Bonds	17,070,000	13,090,000	12,000,000
Revenue Bonds	7,010,000	6,050,000	9,590,000
Other	1,620,230	2,715,642	3,339,693
Lease Purchase Principal	351,722	247,631	1,463,159
Total	26,051,952	22,103,273	26,392,852

*Tax rates are expressed in mills

Jacob LaRue
City Official Title: Mayor

City of Chanute 2021

2021 Neighborhood Revitalization Rebate

Budgeted Funds for 2021	2020 Ad Valorem before Rebate**	2020 Mil Rate before Rebate	Estimate 2021 NR Rebate
General	1,232,503	19.571	52,036
Debt Service	128,975	2.048	5,445
Library	381,194	6.053	16,094
Library Employee Ben	73,115	1.161	3,087
Employee Benefits	768,622	12.205	32,451
Special Liability			0
.25 Sales Tax- CRDA/City			0
0			0
0			0
0			0
0			0
0			0
0			0
TOTAL	2,584,409	41.037	109,113

2020 July 1 Valuation: 62,976,795

Valuation Factor: 62,976.795

Neighborhood Revitalization Subj to Rebate: 2,658,843

Neighborhood Revitalization factor: 2,658.843

**This information comes from the 2021 Budget Summary page. See instructions tab #13 for comp the Neighborhood Revitalization Rebate table.

CHANUTE CITY COMMISSION
REGULAR MEETING
MONDAY, AUGUST 10, 2020

AGENDA ITEM – 9B

ITEM: New Business

INITIATOR: City Manager/Chief Finance Officer

SUBJECT: Water, Refuse and Sewer Rates

BACKGROUND: During the recent budget work session City Commissioners have discussed adjusting rates for certain of the City's utilities.

ANALYSIS: Adjusting periodically individual utility rates helps each utility receive sufficient revenue to cover the expenses of operation.

FINANCIAL CONSIDERATION: The proposed new rates should meet the discussed goal of having positive yearly balances in each utility.

LEGAL CONSIDERATION: The City Attorney has prepared three draft ordinances for review.

RECOMMENDATION: Consider Ordinances providing rate adjustments.

Water

	Annual Customers	Monthly Customers	Total CCF	Average Monthly CF Per Customer	Average Monthly Charge	Meter Charge	Average CCF	Monthly Revenue	Annual Revenue	Projected Average CCF	Dollar Change Per CF	Average Monthly Bill Change	Percent Change	Projected Average Monthly Revenue	Projected Revenue	
Residential Inside	42,400	3,533	19,204,366.00	452.93	23.68	4.00	0.0435	$ 83,686.92	$ 1,004,243.00	0.0525	0.0090	$ 4.09	17%	27.78	$ 1,177,829.22	
Residential Outside	1,202	100	584,711.00	486.45	35.30	5.50	0.0605	$ 3,535.58	$ 42,427.00	0.0705	0.0100	$ 4.50	13%	39.79	$ 47,833.13	
Commercial Inside	6,179	515	9,137,412.00	1,478.78	74.25	15.00	0.0435	$ 38,234.58	$ 458,815.00	0.0525	0.0090	$ 18.38	25%	92.64	$ 572,399.13	
Commercial Outside	207	17.25	311,810.00	1,506.33	61.09	4.00	0.0379	$ 1,053.75	$ 12,645.00	0.0705	0.0326	$ 49.11	80%	110.20	$ 22,810.61	
Industrial Inside	480	40	2,369,480.00	4,936.42	219.14	15.00	0.0414	$ 8,765.58	$ 105,187.00	0.0525	0.0111	$ 55.02	25%	274.16	$ 131,597.70	
Industrial Outside	24	2	91,296.00	3,804.00	235.83	15.00	0.0581	$ 471.67	$ 5,660.00	0.0705	0.0124	$ 47.35	20%	283.18	$ 6,796.37	
									$ 1,628,977.00						$ 1,959,266.14	$ 330,289.14

Trash

	Annual Customers	Customers	Price Per Customer	Revenue	Percent Change	Dollar Change	New Price	Projected Revenue		
Residential Inside	38643	3220	$ 14.96	$ 578,099.28	37%	$ 5.54	$ 20.50	$ 791,996.01	$ 65,999.67	$ 329,998.34
Residential Outside	583	49	$ 21.12	$ 12,312.96	45%	$ 9.50	$ 30.62	$ 17,853.79	$ 1,487.82	$ 7,439.08
Senior Inside	84	7	$ 14.96	$ 1,256.64	37%	$ 5.54	$ 20.50	$ 1,721.60	$ 143.47	$ 717.33
Commercial Inside	2575	215	$ 15.75	$ 40,556.25	37%	$ 5.83	$ 21.58	$ 55,562.06	$ 4,630.17	$ 23,150.86
Commercial Outside	25	2	$ 23.33	$ 583.25	45%	$ 10.50	$ 33.83	$ 845.71	$ 70.48	$ 352.38
Industrial Inside	190	16	$ 14.95	$ 2,840.50	37%	$ 5.53	$ 20.48	$ 3,891.49	$ 324.29	$ 1,621.45
Industrial Outside		0		$ -				$ -		
				$ 635,648.88				**$ 871,870.66**		
Tonnage	5000		$ 40.00	$ 200,000.00			$ 50.00	$ 250,000.00	$ 20,833.33	$ 104,166.67
				$ 835,648.88				**$ 1,121,870.66**		

Dumpsters

Size	Annual Customers	Average Monthly Charge	Average Annual Charge	Revenue
1 Yard	982	$ 3.78	$ 45.37	$ 44,550.24
2 Yard	1081	$ 6.44	$ 77.33	$ 83,594.84
2 Yard Oustide	24	$ 12.90	$ 154.74	$ 3,713.76
3 Yard	932	$ 11.32	$ 135.80	$ 126,569.60
3 Yard Outside	12	$ 9.39	$ 112.62	$ 1,351.44
4 Yard	12	$ 13.17	$ 158.08	$ 1,896.96
				$ 261,676.84
				$ 1,097,325.72

$ 1,383,547.50

Dumpster Fees

	1-Yard	2-Yard	3-Yard
Base Fee	$ 14.08	$ 17.08	$ 21.08
Trip Fee	$ 3.75	$ 3.75	$ 3.75
Dump Fee	$ 3.75	$ 6.75	$ 9.75

		Pickups				
	Dumbsters	1	2	3	4	5
	1	$ 44.08	$ 74.08	$ 104.08	$ 134.08	$ 164.08
	2	$ 73.16	$ 118.16	$ 163.16	$ 208.16	$ 253.16
1-Yard Dumpster	3	$ 102.24	$ 162.24	$ 222.24	$ 282.24	$ 342.24
	4	$ 131.32	$ 206.32	$ 281.32	$ 356.32	$ 431.32
	5	$ 160.40	$ 250.40	$ 340.40	$ 430.40	$ 520.40
	1	$ 59.08	$ 101.08	$ 143.08	$ 185.08	$ 227.08
	2	$ 103.16	$ 172.16	$ 241.16	$ 310.16	$ 379.16
2-Yard Dumpster	3	$ 147.24	$ 243.24	$ 339.24	$ 435.24	$ 531.24
	4	$ 191.32	$ 314.32	$ 437.32	$ 560.32	$ 683.32
	5	$ 235.40	$ 385.40	$ 535.40	$ 685.40	$ 835.40
	1	$ 75.08	$ 129.08	$ 183.08	$ 237.08	$ 291.08
	2	$ 135.16	$ 228.16	$ 321.16	$ 414.16	$ 507.16
3-Yard Dumpster	3	$ 195.24	$ 327.24	$ 459.24	$ 591.24	$ 723.24
	4	$ 255.32	$ 426.32	$ 597.32	$ 768.32	$ 939.32
	5	$ 315.40	$ 525.40	$ 735.40	$ 945.40	$ 1,155.40

Sewer

	Annaul Customers	Monthly Customers	Base Charge	Per Cubic Feet of Water	Annual Revenue	Consumption	Dollar Change	Projected Base Charge	Projected Annual Revenue	
Residential Inside	41357	3446	$ 34.64	$ 1.58	$ 1,733,536.84	19,046,225.00	$ 0.50	$ 35.14	$ 1,754,215.34	460.53
Residential Outside	12	1	$ 34.64	$ 1.58	$ 453.27	2,379.00	$ 0.50	$ 35.14	$ 459.27	198.25
Commercial Inside	5545	462	$ 34.64	$ 1.58	$ 325,874.51	8,468,083.00	$ 0.50	$ 35.14	$ 328,647.01	1,527.16
Commercial Outside	24	2	$ 34.64	$ 1.58	$ 29,652.61	1,824,130.00	$ 0.50	$ 35.14	$ 29,664.61	76,005.42
Industrial Inside	468	39	$ 34.64	$ 1.58	$ 56,267.21	2,535,170.00	$ 0.50	$ 35.14	$ 56,501.21	5,417.03
					$ 2,145,784.43				$ 2,169,487.43	$ 23,703.00

(Published in *The Chanute Tribune* _____, 2020)

ORDINANCE NO. _____

AN ORDINANCE AMENDING CHANUTE MUNICIPAL CODE SECTIONS 14.16.010 and 14.16.030 PERTAINING TO WATER SCHEDULE AND CHARGES.

BE IT ORDAINED BY THE GOVERNING BODY OF THE CITY OF CHANUTE, KANSAS:

SECTION 1:

Section 14.16.010, Chanute Municipal Code, is hereby amended to read and provide as follows:

"14.16.010 Within corporate limits - - Schedule. Charges for water consumed by the city to consumers within the corporate limits of the city shall be computed and invoiced monthly upon the following rate schedule:

	Minimum	Meter Charge	Cost per 100 Cubic Feet
Inside City	3.00	4.00	$5.25
CW1	3.00	4.00	$5.25
CW2	3.00	4.00	$5.25

provided there will be no minimum fee for service of less than 15 days."

SECTION 2:

Section 14.16.030, Chanute Municipal Code, is hereby amended to read and provide as follows:

"14.16.030 Charges for water furnished outside city. The charge for water furnished by the city to consumers at a point outside the corporate limits of the city shall be computed and billed monthly upon the water furnished in cubic feet upon the following rate schedule:

	Minimum	Meter Charge	Cost per 100 Cubic Feet
Outside City	4.50	5.50	$7.05

There shall be no minimum charge for service of less than 7 days; and provided further that the city may contract within single users of more than an average of 200,000 gallons or 25,000 cubic feet per month at an equitable and reasonable rate, subject to approval of the city commission."

SECTION 3:

This ordinance shall take effect for the first billing cycle after its publication in the official City newspaper.

Passed and adopted by the Governing Body of THE CITY OF CHANUTE, KANSAS, this 10th day of August, 2020.

ATTEST:

Jacob LaRue, Mayor

Tina L. Bailey, City Clerk

APPROVED AS TO FORM:

David S. Brake, City Attorney

(Published in *The Chanute Tribune* _____, 2020)

ORDINANCE NO. _____

AN ORDINANCE AMENDING CHAPTER 8.08.170, CHANUTE MUNICIPAL CODE, PERTAINING TO REFUSE FEES.

BE IT ORDAINED BY THE GOVERNING BODY OF THE CITY OF CHANUTE, KANSAS:

SECTION 1:

Section 8.08.170, Chanute Municipal Code, is hereby amended to read and provide as follows:

8.08.170 Collection -- Fees -- Schedule. The fees for collection and disposal at ground level and on or adjacent to the street or alley right-of-way which collection is made shall be as follows:

A. Dwelling Unit. For each dwelling unit $20.50 per month per unit.

B. Commercial. For all motels, restaurants, manufacturing plants, commercial businesses and institutions receiving city utilities, the monthly fee shall be a minimum of $21.58 or a fee based on the following schedule of charges:

1. For 1-yard dumpsters furnished by the city, a sum equal to $19.28 times the number of dumpsters provided plus the sum of $3.75 times the number of monthly collection trips plus the sum of $3.75 times the number of dumpsters emptied per month;

2. For 2-yard dumpsters furnished by the city, a sum equal to $22.28 times the number of dumpsters provided plus the sum of $3.75 times the number of monthly collection trips plus the sum of $6.75 times the number of dumpsters emptied per month;

3. For 3-yard dumpsters furnished by the city, a sum equal to $26.28 times the number of dumpsters provided plus the sum of $3.75 times the number of monthly collection trips plus the sum of $9.75 times the number of dumpsters emptied per month;

4. For 4-yard dumpsters furnished by the city, a sum equal to $31.28 times the number of dumpsters provided plus the sum of $3.75 times the number of monthly collection trips plus the sum of $12.75 times the number of dumpsters emptied per month;

5. For 6-yard dumpsters furnished by the city, a sum equal to $37.28 times the number of dumpsters provided plus the sum of $3.75 times the number of monthly collection trips plus the sum of $18.75 times the number of dumpsters emptied per month;

6. For 8-yard dumpsters furnished by the city, a sum equal to $45.28 times the number of dumpsters provided plus the sum of $3.75 times the number of monthly collection trips plus the sum of $24.75 times the number of dumpsters emptied per month;

7. In the event a business entity shall desire service under this section and it be determined by the city to be unfeasible to use and utilize city approved dumpsters or city approved equivalent containers by reason of space or other problems, the city may contract with such customer for other type of service at a rate and subject to conditions mutually agreeable to the city and such customer;

8. Tenants, occupants or owners of apartment buildings or multi-family dwellings may elect to request service under this subsection under the applicable rates herein provided.

The director of sanitation services shall determine the appropriate size dumpster for all commercial accounts.

SECTION 2:

This ordinance shall take effect for the first billing cycle after its publication in the official City newspaper.

Passed and adopted by the Governing Body of the City of Chanute, Kansas, this 10th day of August, 2020.

_____
Jacob LaRue, Mayor

ATTEST:

_____
Tina L. Bailey, City Clerk

APPROVED AS TO FORM:

_____
David S. Brake, City Attorney

(Published in *The Chanute Tribune* _____,2020)

ORDINANCE NO. _____

AN ORDINANCE AMENDING CHAPTER 14.20.040, CHANUTE MUNICIPAL CODE, PERTAINING TO SEWER RATES.

BE IT ORDAINED BY THE GOVERNING BODY OF THE CITY OF CHANUTE, KANSAS:

SECTION 1:

Section 14.20.040, Chanute Municipal Code, is hereby amended to read and provide as follows:

"14.20.040 Rates- - Designated. The governing body of the city finds and determines that the rates, fees and charges for the use and services or availability of the use and services of the sanitary sewerage system of the city which will be necessary and adequate to provide for the maintenance, operation and improvement of such sanitary sewerage system are as hereinafter specified.

The monthly rates required and which shall be charged and collected by the city for sewerage service furnished or available by the city's sanitary sewerage system shall be based upon the quantity of water used and shall be measured by the water meter or meters installed on the premises served or for which service is available, unless suitable wastewater-measuring and recording equipment is furnished and maintained by the person receiving service, and said charges shall be as follows:

A. Charges for service available under Section 14.20.030, except for those charged under subsection (B), will be as follows:

Year(s)	Base Charge	Usage Charge Per 100 Cubic Feet of Water
2020	$35.14	$1.58

The amount of water usage for residential service shall be determined as set out in Subsection (1).

1. The average monthly water usage for each residential customer shall be calculated from the customer's three (3) normal monthly billings occurring between November 15th and February 15th. The basis so established shall be used in rendering sewage service bills beginning the 15th of March following the establishment of the basis and shall be used until the following March 15th. A new

basis shall be established each year from the customer's three (3) normal monthly billings occurring between November 15th and February 15th.

2. The basis for those residential customers not having three (3) normal monthly billings at their current service account between November 15th and February 15th from which to calculate the average monthly water usage shall be the average monthly water usage billed for all residential accounts between the preceding November 15th and February 15th as calculated by the city utility office. Such basis shall be used until the customer's own basis is established from the next three (3) normal billings occurring between November 15th and February 15th.

3. The basis for nonresidential accounts shall be determined by the current monthly water usage by the particular applicant. Any applicant may appeal such determination to the city manager who shall investigate the circumstances and fix the required charge."

B. For any industrial, commercial or other contributor who discharges process wastewater or other wastewater into the sanitary sewer system which contained more than 300 mg/L of BOD5 and/or more than 350 mg/L TSS, a charge of $7.00 per month plus $.70 per 100 cubic feet for all wastewater discharged, plus $0.10 per pound for each pound of BOD5, plus $.10 per pound for each pound of suspended solids. To determine the applicability of this subsection to any user, the city, or its designated agents, will perform currently recognized and accepted analyses of user's discharge into the sewer system of the city on a periodic basis as deemed necessary by the city to determine the content of discharge. The condition of discharge found and determined by such analysis shall be applied to the rate charged any user until subsequent analysis shall reflect a change of charge or rate. Results of such analyses shall be available for inspection by the user. In the event of substantial change in sewer discharge by any user so affected by this subsection, such user may request the city to make a re-evaluation of sewage discharge content at reasonable intervals.

C. For haulers of liquid wastes dumping such wastes in any city-approved portion of the sewage works, $14.00 per occurrence plus $1.36 per 1,000 gallons of all wastewater dumped."

SECTION 2:

This ordinance shall take effect for the first billing cycle after its publication in the official City newspaper.

Passed and adopted by the Governing Body of THE CITY OF CHANUTE, KANSAS, this 10th day of August, 2020.

Jacob LaRue, Mayor

ATTEST:

Tina L. Bailey, Deputy City Clerk

APPROVED AS TO FORM:

David S. Brake, City Attorney

CHANUTE CITY COMMISSION
REGULAR MEETING
MONDAY, AUGUST 10, 2020

AGENDA ITEM – 9C

ITEM: New Business

SUBJECT: Consider Landfill Tonnage Rate Increase

INITIATOR: City Manager

BACKGROUND: Landfill tonnage rates were discussed during a recent City Budget Work Session and City staff is suggesting a rate increase from $40 per ton to $50 per ton. The current rate of $40 per ton was established March 2012. The tonnage rate does not include the State Solid Waste Fee set at $1.00 per ton.

ANALYSIS: Per Ordinance 2588, before the City Manager can change any landfill rate, the proposed change must be placed before the City Commission at a regularly scheduled meeting.

FINANCIAL CONSIDERATION: Projected revenue increase of $50,000.

LEGAL CONSIDERATION: None.

RECOMMENDATION: Approve the proposed landfill tonnage rate increase and set the tonnage rate at $50 per ton, effective September 1, 2020.

8.08.290 - City landfill—Use regulations and charges.

A. The city manager is authorized and empowered to establish hours and regulations for the use of the city landfill.

B. Persons may use the facilities of the city landfill during its regular hours of operation and in accordance with the rules and regulations thereof upon payment of a charge to be set by the city manager for the use, or a charge can be paid based on a rate per ton of waste deposited plus the state solid waste tonnage fee. The city manager will also set a lower per tonnage fee for depositing brush, tree limbs, clean rubble and white goods, such as refrigerators, but excluding sawdust.

C. The charge for disposing of tires at the landfill shall be set by the city manager and is to be based on market prices.

D. Before the city manager can change the hours of operation or any landfill rate, the proposed change must be placed before the city commission at a regularly scheduled meeting as the city commission retains the authority to overrule the city manager's decision.

(Ord. 2491 §2, 2002; Ord. 2422 §1, 1997: Ord. 2394 §3, 1994).

(Ord. No. 2559, § 1, 7-26-2010; Ord. No. 2588, § 1, 2-13-2012)

CHANUTE CITY COMMISSION
REGULAR MEETING
MONDAY, AUGUST 10, 2020

AGENDA ITEM – 9D

ITEM: New Business

SUBJECT: Consider Approval to Purchase Trash Truck

BACKGROUND: During our budget work sessions staff presented commissioners with a request to replace the Sanitation Department's 2009 Sterling Trash Truck. This unit has a worn out hydraulic system indicating the expired life of the truck. The standby traditionally runs 100 hours but due to unexpected circumstances has exceeded 1,000 hours. The new trash truck will be put into full service allowing for the 2015 trash truck to be transferred to standby.

ANALYSIS: Attached is two quotes, one from Merle Kelly Ford and the other from Downing for the commissioner's review.

FINANCIAL CONSIDERATION: Cap Lease purchase through the Equipment Reserve Fund.

LEGAL CONSIDERATION: N/A

RECOMMENDATION: Approval to purchase new trash truck.

7/20/20
3:05 JBailey

United Funding

July 20, 2020

FORMAL PROPOSAL

OBLIGOR: CITY OF CHANUTE, KS

- ✓ This is a finance/ownership contract. No residual value.
- ✓ Fixed interest rate for the five (5) year term.

EQUIPMENT: ONE (1) 2021 FREIGHTLINER

OPTION 1

Acquisition Cost:	$93,771.00	**Term:**	Five (5) years	**First Payment Due:**	One Month from Close
Down Payment:	$ 0.00	**Payment Mode:**	Monthly in Arrears	**Payment Amount:**	$1,748.17
Trade In:	$ 0.00	**Interest Rate:**	4.500%		
Principal Balance:	$93,771.00	**Rate Factor:**	0.018643		

- **This is a proposal only and is not a commitment to finance. This proposal is subject to credit review and approval and proper execution of mutually acceptable documentation.**
- Failure to consummate this transaction once credit approval is granted and the documents are drafted and delivered to Obligor will result in a documentation fee being assessed to the Obligor.
- This transaction must be credit approved, all documents properly executed and returned to United Funding and the transaction funded on ALL proposals on or before August 3, 2020. If funding does not occur within that time-frame, or there is a change of circumstance which adversely affects the expectations, rights, or security of Obligee or its assignees, then Obligee or its assignees reserve the right to adjust and determine a new interest rate factor and payment amount, or withdraw this proposal in its entirety.
- This transaction must be designated as tax-exempt under Section 103 of the Internal Revenue Code of 1986 as amended.
- **OBLIGOR'S TOTAL AMOUNT OF TAX-EXEMPT DEBT TO BE ISSUED IN THIS CALENDAR YEAR WILL NOT EXCEED THE $10,000,000 LIMIT, OR THE INTEREST RATE IS SUBJECT TO CHANGE.**

UNITED FUNDING		CITY OF CHANUTE, KS	
Signature	Title	Signature	Title
Date		Date	

Downing
SALES & SERVICE INC
IT'S SERVICE AFTER THE SALE THAT COUNTS

QUOTE

Date: 07/20/20

To: Wayne
City of Chanute

Qty	Description	Unit Price	Line Total
1.00	Pak-Mor R220C "Curve Shell" 20 Yard Rear Load Refuse Body Equipped With All Standard Options Except As Replaced With the Options Listed Below:	$ 138,771.00	$ 138,771.00
	*48 GPM Pump		
	*Strobe Lights (4 Rear - 2 Front)		
	*Hopper Lights (2)		
	*Access Door, Streetside		
	*Power Shut Off - Access Door		
	*Driver Signal, Streetside		
	*14,000# Overhead Reeving Cylinder		
	*3,000# Kick Bar		
	*2" Vertical Latch Kit		
	*Rear View Camera		
	*Paint: White		
	*Manufacturer's Warranty: One (1) Year		
	Mounted on:		
	2021 Freightliner M2-106 with Hot Shift PTO (Specifications Attached)		
1.00	Trade In: 2009 Sterling VIN #2FZACHBS29AAF6050 With Loadmaster Rear Load Refuse Body	$ (45,000.00)	$ (45,000.00)
		Total:	$ 93,771.00

Customer To Pay Sales Tax
At Time of Licensing

Quoted By:
Randy Weaver
417-839-0509

Accepted By:

3 Indigo Road, Phillipsburg, MO 65722

BUILT FOR THE LONG HAUL

PAK-MOR LIMITED

R200C

Pak-Mor's performance proven Load Liner Series is the most consistently designed product family in the refuse equipment industry today.

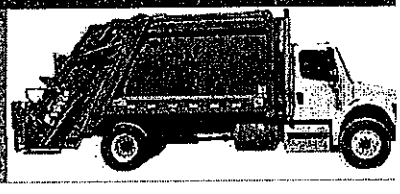

GENERAL SPECIFICATIONS

MODEL	CAPACITY		OVERALL LENGTH		BODY LENGTH		CG-BODY (CG-B)		CG-PAYLOAD (CG-P)		BODY WEIGHT	
	yd^3	m^3	in	mm	in	mm	in	mm	in	mm	lb	kg
R216C	16	12.2	211	5360	137	3480	89	2261	64	1626	12220	5543
R218C	18	13.8	224	5690	150	3810	96	2438	71	1803	12450	5647
R220C	20	15.3	236	5995	162	4115	106	2692	78	1981	12690	5756
R225C	25	19.1	272	6909	198	5029	134	3404	99	2515	13280	6024
R230C	30	22.9	304	7722	230	5842	154	3912	113	2870	13790	6255

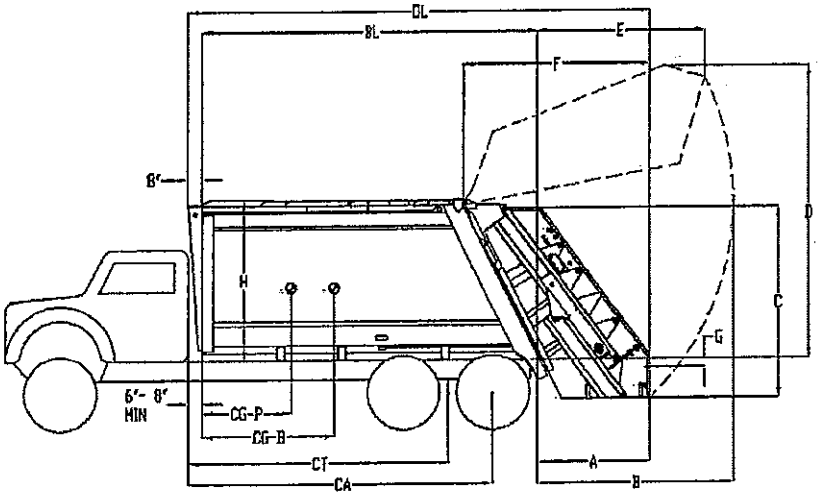

DIMENSIONAL SPECIFICATIONS

SYM.	DESCRIPTION	DIMENSIONS	
		in	mm
A	End of Body to End of Hopper	65	1651
B	End of Body to Extreme Arc of Tailgate	113	2870
C	Height of Tailgate	115	2921
D	Height of Tailgate - Elevated Position	176	4470
E	End of Body to End of Tailgate - Elevated Position	94	2388
F	Tailgate Length	107	2718
G	Loading Height Below Chassis Frame	5	127
G'	Loading Height Below Chassis Frame - w/ Opt. Large Volume Hopper	1	25
H	Body Height	94	2388
-	Body Width	96	2438

Pak-Mor Ltd.
P.O. Box 389
Seguin, TX 78156
Tel 830-303-7256
Fax 830-303-3648

info@pakmor.com
www.pakmor.com

The products illustrated in this catalog are protected by United States and foreign patents, patents pending, and patents applied for. Illustrations and specifications are not binding as Pak-Mor reserves the right under the company's product development program to change the design or construction details and to furnish equipment when thus altered without reference to illustrations or specifications presented herein and supersede all previously published information.

SEPT 2014

R200C

BODY & CONSTRUCTION SPECIFICATIONS

Body Sides & Roof (80k)	10 ga	3.4 mm	Hopper Load Width	78 in	1981 mm	Sweep Cylinders	5 in	127.0 mm
Body Floor (50k)	10 ga	3.4 mm	Hopper Open Height	62 in	1575 mm	Eject Cylinder (16-20)	5 in	127.0 mm
Ejection Panel Guides	6 in	152.4 mm	Packing Cycle			Eject Cylinder (25,30)	5-1/4 in	133.3 mm
Ejection Panel (50k)	10 ga	3.4 mm	Complete	25 sec. (approx.)		Tailgate Lift Cylinders	3-1/2 in	88.9 mm
Hopper Sidewalls (50k)	3/16 in	4.8 mm	Reload	12 sec. (approx.)		Oil Reservoir	50 gal	189 L
Hopper Floor (100k)	1/4 in	6.4 mm	Packing Force			Pump	48 GPM	181.7 LPM
Sweep/Pack Blade (50k)	1/4 in	6.4 mm	Pack Cyl. Output	62831 lb	28495 kg	Hoses	4:1 burst	
Hopper Capacity	2.8 yd³	2.2 m³	Sweep Face	34 psi	234.4 KPa	Primary Pressure	2000 psi	13790 KPa
Hopper Cap. (CHD)	3.2 yd³	2.4 m³	Pack Cylinders	5 in	127.0 mm	Packing Pressure	1600 psi	11030 KPa

CHASSIS REQUIREMENTS (*) (**) (***) (****)

MODEL	CA "CLEAR"		CT "CLEAR"		GAWR FRONT			GAWR REAR		GVW MINIMUM	
	in	mm	in	mm	type	lb	kg	lb	kg	lb	kg
R216C	108-118	2743-2997	N/A		CONV	7000	3174	22000	9977	29000	13154
					COE	9000	4082	22000	9977	31000	14061
R218C	120-130	3048-3302	N/A		CONV	9000	4082	23000	10431	32000	14515
					COE	10500	4762	23000	10431	33500	15196
R220C	138-148	3505-3579	120-130	3048-3302	SA CONV	10000	4535	*23000	10431	33000	14968
					SA COE	11500	5215	23000	10431	34500	15649
					TA CONV	7500	3401	34000	15422	41500	18824
					TA COE	9000	4082	34000	15422	43000	19505
R225C	N/A		155-165	3937-4191	CONV	10000	4535	34000	15422	44000	19958
					COE	11500	5215	34000	15422	45500	20638
R230C	N/A		186-196	4724-4978	CONV	11000	4989	34000	15422	45000	20412
					COE	13000	5896	34000	15422	47000	21319

*Rear Springs: 30,000# Spring Package

(*) Conv = Conventional Cab; COE = Cab Over Engine; SA = Single Axle; TA = Tandem Axle

(**) Body weights, minimum front and rear gross axle weight ratings (GAWR), and gross vehicle weights (GVW) are for standard R200C bodies. If optional features are specified, GAWR and GVW must be increased accordingly.

(***) Any chassis sent to PAK-MOR, LTD with less than minimum specifications will not be mounted

(****) Maximum after frame single axle chassis = 32 inches.

***Fuel Tank & DEF Tank - Driver Side Under Cab*

Standard Equipment:

- Skid Resistant Rear Steps & Handrails
- LED Light Package
- Rear Mounted 5 Lamp Upper Light Bar
- Positive Lever Controls w/ Throttle Advance
- Driver Alert, Curbside
- 50 Gal. Frame Mounted Oil Reservoir
- 150 GPM In-tank Return Filter

Optional Equipment:

- Roll Bar Handling Device
- Overhead Winch
- Overhead Reeving Cylinder
- Automatic Tailgate Locks
- Hopper Lights
- Strobe & Multifunction Lights
- Toolboxes & Water Coolers
- Suction Line Filter
- Access Door & Ladder
- Front Mount Pump Systems
- Body Mounted Oil Reservoir
- Splash Guards
- Hopper & Gate Liners
- & More....

Downing
SALES & SERVICE, INC.
IT'S SERVICE AFTER THE SALE THAT COUNTS
3 Indigo Rd, Phillipsburg, MO 65722
417-589-6227

Pak-Mor Ltd.
P.O. Box 389
Seguin, TX 78156
Tel 830-303-7256
Fax 830-303-3648
info@pakmor.com
www.pakmor.com

All Pak-Mor bodies comply with standards established by the American National Standards Institute (ANSI) Z 245.1-2012.

SEPT 2014

Prepared for:
SALES DEPARTMENT
Downing Sales Service Bb
3 Indigo Rd

Phillipsburg, MO 65722
Phone: 417 589 6227

M2 106 CONVENTIONAL CHASSIS

SET BACK AXLE - TRUCK

CUM L9 270 HP @.2000 RPM; 2200 GOV RPM, 800 LB/FT @ 1300 RPM

ALLISON 3500 RDS AUTOMATIC TRANSMISSION WITH PTO PROVISION

DETROIT DA-RS-23.0-4 23,000# R-SERIES SINGLE REAR AXLE

30,000# FLAT LEAF SPRING REAR SUSPENSION WITH HELPER AND RADIUS ROD

DETROIT DA-F-10.0-3 10,000# FF1 71.5 KPI/3.74 DROP SINGLE FRONT AXLE

12,000# DUAL TAPERLEAF FRONT SUSPENSION

106 INCH BBC FLAT ROOF ALUMINUM CONVENTIONAL CAB

5175MM (204 INCH) WHEELBASE

11/32X3-1/2X10-15/16 INCH STEEL FRAME (8.73MMX277.8MM/0.344X10.94 INCH) 120KSI

2025MM (80 INCH) REAR FRAME OVERHANG

Prepared for:
SALES DEPARTMENT
Downing Sales Service Bb
3 Indigo Rd

Phillipsburg, MO 65722
Phone: 417 589 6227

SPECIFICATION PROPOSAL

Data Code	Description	Weight Front	Weight Rear
Price Level			
PRL-23M	M2 PRL-23M (EFF:01/21/20)		
Data Version			
DRL-025	SPECPRO21 DATA RELEASE VER 025		
Vehicle Configuration			
001-172	M2 106 CONVENTIONAL CHASSIS	5,709	3,503
004-221	2021 MODEL YEAR SPECIFIED		
002-004	SET BACK AXLE - TRUCK		
019-002	STRAIGHT TRUCK PROVISION		
003-001	LH PRIMARY STEERING LOCATION		
General Service			
AA1-002	TRUCK CONFIGURATION		
AA6-002	DOMICILED, USA (EXCLUDING CALIFORNIA AND CARB OPT-IN STATES)		
A85-001	REFUSE SERVICE		
A84-1GM	GOVERNMENT BUSINESS SEGMENT		
AA4-013	MOIST BULK COMMODITY		
AA5-002	TERRAIN/DUTY: 100% (ALL) OF THE TIME, IN TRANSIT, IS SPENT ON PAVED ROADS		
AB1-008	MAXIMUM 8% EXPECTED GRADE		
AB5-001	SMOOTH CONCRETE OR ASPHALT PAVEMENT - MOST SEVERE IN-TRANSIT (BETWEEN SITES) ROAD SURFACE		
995-091	MEDIUM TRUCK WARRANTY		
A66-99D	EXPECTED FRONT AXLE(S) LOAD : 10000.0 lbs		
A68-99D	EXPECTED REAR DRIVE AXLE(S) LOAD : 23000.0 lbs		
A63-99D	EXPECTED GROSS VEHICLE WEIGHT CAPACITY : 33000.0 lbs		
Truck Service			

Prepared for:
SALES DEPARTMENT
Downing Sales Service Bb
3 Indigo Rd

Phillipsburg, MO 65722
Phone: 417 589 6227

Data Code	Description	Weight Front	Weight Rear
AA3-061	REFUSE, SIDE LOAD OR REAR PACKER BODY - UNLOADS IN A LANDFILL		
A88-99D	EXPECTED TRUCK BODY LENGTH : 0.0 ft		
AE2-99D	EXPECTED TRUCK BODY WIDTH : 96.0 in		
AF3-1R8	DOWNING SALES & SERVICE, INC.		
AF7-99D	EXPECTED BODY/PAYLOAD CG HEIGHT ABOVE FRAME "XX" INCHES : 32.0 in		
Engine			
101-22N	CUM L9 270 HP @ 2000 RPM; 2200 GOV RPM, 800 LB/FT @ 1300 RPM	640	30
Electronic Parameters			
79A-070	70 MPH ROAD SPEED LIMIT		
79B-000	CRUISE CONTROL SPEED LIMIT SAME AS ROAD SPEED LIMIT		
79K-014	PTO MODE ENGINE RPM LIMIT - 1800 RPM		
79M-001	PTO MODE BRAKE OVERRIDE - SERVICE BRAKE APPLIED		
79P-002	PTO RPM WITH CRUISE SET SWITCH - 700 RPM		
79Q-003	PTO RPM WITH CRUISE RESUME SWITCH - 800 RPM		
79S-001	PTO MODE CANCEL VEHICLE SPEED - 5 MPH		
79U-007	PTO GOVERNOR RAMP RATE - 250 RPM PER SECOND		
79W-001	ONE REMOTE PTO SPEED		
79X-012	PTO SPEED 1 SETTING - 1400 RPM		
80G-002	PTO MINIMUM RPM - 700		
80J-002	REGEN INHIBIT SPEED THRESHOLD - 5 MPH		
Engine Equipment			
99C-017	2016-2019 ONBOARD DIAGNOSTICS/2010 EPA/CARB/FINAL GHG17 CONFIGURATION		
99D-010	NO 2008 CARB EMISSION CERTIFICATION		
13E-001	STANDARD OIL PAN		
105-001	ENGINE MOUNTED OIL CHECK AND FILL		
133-004	ONE PIECE VALVE COVER		
014-099	SIDE OF HOOD AIR INTAKE WITH FIREWALL MOUNTED DONALDSON AIR CLEANER		
124-1D7	DR 12V 160 AMP 28-SI QUADRAMOUNT PAD ALTERNATOR WITH REMOTE BATTERY VOLT SENSE		
292-235	(2) DTNA GENUINE, FLOODED STARTING, MIN 2000CCA, 370RC, THREADED STUD BATTERIES	10	
290-017	BATTERY BOX FRAME MOUNTED		

Prepared for:
SALES DEPARTMENT
Downing Sales Service Bb
3 Indigo Rd

Phillipsburg, MO 65722
Phone: 417 589 6227

Data Code	Description	Weight Front	Weight Rear
281-001	STANDARD BATTERY JUMPERS		
282-001	SINGLE BATTERY BOX FRAME MOUNTED LH SIDE UNDER CAB		
291-017	WIRE GROUND RETURN FOR BATTERY CABLES WITH ADDITIONAL FRAME GROUND RETURN		
289-001	NON-POLISHED BATTERY BOX COVER		
87P-001	CAB AUXILIARY POWER CABLE	5	
293-058	POSITIVE LOAD DISCONNECT WITH CAB MOUNTED CONTROL SWITCH MOUNTED OUTBOARD DRIVER SEAT	8	
107-032	CUMMINS TURBOCHARGED 18.7 CFM AIR COMPRESSOR WITH INTERNAL SAFETY VALVE		
108-002	STANDARD MECHANICAL AIR COMPRESSOR GOVERNOR		
131-013	AIR COMPRESSOR DISCHARGE LINE		
152-041	ELECTRONIC ENGINE INTEGRAL SHUTDOWN PROTECTION SYSTEM		
128-076	CUMMINS ENGINE INTEGRAL BRAKE WITH VARIABLE GEOMETRY TURBO ON/OFF	20	
016-1C2	RH OUTBOARD UNDER STEP MOUNTED HORIZONTAL AFTERTREATMENT SYSTEM ASSEMBLY WITH RH B-PILLAR MOUNTED VERTICAL TAILPIPE	30	25
28F-002	ENGINE AFTERTREATMENT DEVICE, AUTOMATIC OVER THE ROAD REGENERATION AND DASH MOUNTED REGENERATION REQUEST SWITCH		
239-038	11 FOOT 06 INCH (138 INCH+0/-5.9 INCH) EXHAUST SYSTEM HEIGHT		
237-1CR	RH CURVED VERTICAL TAILPIPE B-PILLAR MOUNTED ROUTED FROM STEP		
23U-001	6 GALLON DIESEL EXHAUST FLUID TANK		
30N-003	100 PERCENT DIESEL EXHAUST FLUID FILL		
43X-002	LH MEDIUM DUTY STANDARD DIESEL EXHAUST FLUID TANK LOCATION		
23Y-001	STANDARD DIESEL EXHAUST FLUID PUMP MOUNTING		
43Y-001	STANDARD DIESEL EXHAUST FLUID TANK CAP		
242-011	ALUMINUM AFTERTREATMENT DEVICE/MUFFLER/TAILPIPE SHIELD(S)		
273-018	HORTON DRIVEMASTER ADVANTAGE ON/OFF FAN DRIVE		
276-001	AUTOMATIC FAN CONTROL WITHOUT DASH SWITCH, NON ENGINE MOUNTED		
110-003	CUMMINS SPIN ON FUEL FILTER		

Prepared for:
SALES DEPARTMENT
Downing Sales Service Bb
3 Indigo Rd

Phillipsburg, MO 65722
Phone: 417 589 6227

Data Code	Description	Weight Front	Weight Rear
118-008	COMBINATION FULL FLOW/BYPASS OIL FILTER		
266-101	900 SQUARE INCH ALUMINUM RADIATOR	15	
103-039	ANTIFREEZE TO -34F, OAT (NITRITE AND SILICATE FREE) EXTENDED LIFE COOLANT		
171-007	GATES BLUE STRIPE COOLANT HOSES OR EQUIVALENT		
172-001	CONSTANT TENSION HOSE CLAMPS FOR COOLANT HOSES		
270-016	RADIATOR DRAIN VALVE		
168-002	LOWER RADIATOR GUARD		
138-011	PHILLIPS-TEMRO 1000 WATT/115 VOLT BLOCK HEATER	4	
140-053	BLACK PLASTIC ENGINE HEATER RECEPTACLE MOUNTED UNDER LH DOOR		
134-001	ALUMINUM FLYWHEEL HOUSING		
132-004	ELECTRIC GRID AIR INTAKE WARMER		
155-058	DELCO 12V 38MT HD STARTER WITH INTEGRATED MAGNETIC SWITCH		
Transmission			
342-584	ALLISON 3500 RDS AUTOMATIC TRANSMISSION WITH PTO PROVISION	200	60
Transmission Equipment			
343-322	ALLISON VOCATIONAL PACKAGE 170 - AVAILABLE ON 3000/4000 PRODUCT FAMILIES WITH VOCATIONAL MODEL RDS AND EVS		
84B-013	ALLISON VOCATIONAL RATING FOR REFUSE APPLICATIONS AVAILABLE WITH ALL PRODUCT FAMILIES		
84C-023	PRIMARY MODE GEARS, LOWEST GEAR 1, START GEAR 1, HIGHEST GEAR 6, AVAILABLE FOR 3000/4000 PRODUCT FAMILIES ONLY		
84D-023	SECONDARY MODE GEARS, LOWEST GEAR 1, START GEAR 1, HIGHEST GEAR 6, AVAILABLE FOR 3000/4000 PRODUCT FAMILIES ONLY		
84E-017	S5 PERFORMANCE LIMITING PRIMARY SHIFT SCHEDULE, AVAILABLE FOR 3000/4000 PRODUCT FAMILIES ONLY		
84F-016	S5 PERFORMANCE LIMITING SECONDARY SHIFT SCHEDULE, AVAILABLE FOR 3000/4000 PRODUCT FAMILIES ONLY		
84G-014	2200 RPM PRIMARY MODE SHIFT SPEED		
84H-014	2200 RPM SECONDARY MODE SHIFT SPEED		
84J-000	ENGINE BRAKE RANGE PRESELECT RECOMMENDED BY DTNA AND ALLISON, THIS DEFINED BY ENGINE AND VOCATIONAL USAGE		

Prepared for:
SALES DEPARTMENT
Downing Sales Service Bb
3 Indigo Rd

Phillipsburg, MO 65722
Phone: 417 589 6227

Data Code	Description	Weight Front	Weight Rear
84K-000	ENGINE BRAKE RANGE ALTERNATE PRESELECT RECOMMENDED BY DTNA AND ALLISON, THIS DEFINED BY ENGINE AND VOCATIONAL USAGE		
84N-200	FUEL SENSE 2.0 DISABLED - PERFORMANCE - TABLE BASED		
84U-000	DRIVER SWITCH INPUT - DEFAULT - NO SWITCHES		
85E-009	MAXIMUM ENGINE SPEED FOR PTO ENGAGEMENT 900 RPM		
85F-030	MAXIMUM ENGINE SPEED FOR PTO OPERATION 1800 RPM		
353-067	VEHICLE INTERFACE WIRING CONNECTOR WITH PDM AND BLUNT CUTS, AT BACK OF CAB		
34C-002	ELECTRONIC TRANSMISSION CUSTOMER ACCESS CONNECTOR MOUNTED BACK OF CAB		
362-322	CHELSEA PTO - CHL280GGFJP B5RK	~~50~~	48 Gal. Pump
	NEED CODE 362-328 CHELSA PTO # CHL280GMFJPB5RK		
363-001	PTO MOUNTING, LH SIDE OF MAIN TRANSMISSION		
341-018	MAGNETIC PLUGS, ENGINE DRAIN, TRANSMISSION DRAIN, AXLE(S) FILL AND DRAIN		
345-003	PUSH BUTTON ELECTRONIC SHIFT CONTROL, DASH MOUNTED		
97G-004	TRANSMISSION PROGNOSTICS - ENABLED 2013		
370-015	WATER TO OIL TRANSMISSION COOLER, IN RADIATOR END TANK		
346-003	TRANSMISSION OIL CHECK AND FILL WITH ELECTRONIC OIL LEVEL CHECK		
35T-001	SYNTHETIC TRANSMISSION FLUID (TES-295 COMPLIANT)		
Front Axle and Equipment			
400-1A5	DETROIT DA-F-10.0-3 10,000# FF1 71.5 KPI/3.74 DROP SINGLE FRONT AXLE		
402-049	MERITOR 16.5X5 Q+ CAST SPIDER CAM FRONT BRAKES, DOUBLE ANCHOR, FABRICATED SHOES		
403-002	NON-ASBESTOS FRONT BRAKE LINING		
419-023	CONMET CAST IRON FRONT BRAKE DRUMS		
409-006	FRONT OIL SEALS		
408-001	VENTED FRONT HUB CAPS WITH WINDOW, CENTER AND SIDE PLUGS - OIL		
416-022	STANDARD SPINDLE NUTS FOR ALL AXLES		

Prepared for:
SALES DEPARTMENT
Downing Sales Service Bb
3 Indigo Rd

Phillipsburg, MO 65722
Phone: 417 589 6227

	Data Code	Description	Weight Front	Weight Rear
	405-002	MERITOR AUTOMATIC FRONT SLACK ADJUSTERS		
	536-050	TRW THP-60 POWER STEERING		
	539-003	POWER STEERING PUMP		
	534-015	2 QUART SEE THROUGH POWER STEERING RESERVOIR		
	40T-001	MINERAL SAE 80/90 FRONT AXLE LUBE		
Front Suspension				
	620-1F0	12,000# DUAL TAPERLEAF FRONT SUSPENSION	42	
	619-005	MAINTENANCE FREE RUBBER BUSHINGS - FRONT SUSPENSION		
	410-001	FRONT SHOCK ABSORBERS		
Rear Axle and Equipment				
	420-1GK	DETROIT DA-RS-23.0-4 23,000# R-SERIES SINGLE REAR AXLE		30
	421-588	5.88 REAR AXLE RATIO		
	424-001	IRON REAR AXLE CARRIER WITH STANDARD AXLE HOUSING		
	386-073	MXL 17T MERITOR EXTENDED LUBE MAIN DRIVELINE WITH HALF ROUND YOKES	20	20
	452-001	DRIVER CONTROLLED TRACTION DIFFERENTIAL - SINGLE REAR AXLE		
	878-018	(1) DRIVER CONTROLLED DIFFERENTIAL LOCK REAR VALVE FOR SINGLE DRIVE AXLE		
	87B-004	BLINKING LAMP WITH EACH MODE SWITCH, DIFFERENTIAL UNLOCK WITH IGNITION OFF, ACTIVE <5 MPH		
	423-033	MERITOR 16.5X7 Q+ CAST SPIDER HEAVY DUTY CAM REAR BRAKES, DOUBLE ANCHOR, FABRICATED SHOES		
	433-002	NON-ASBESTOS REAR BRAKE LINING		
	434-012	BRAKE CAMS AND CHAMBERS ON REAR SIDE OF DRIVE AXLE(S)		
	451-023	CONMET CAST IRON REAR BRAKE DRUMS		
	440-006	REAR OIL SEALS		
	426-100	WABCO TRISTOP D LONGSTROKE 1-DRIVE AXLE SPRING PARKING CHAMBERS		
	428-002	MERITOR AUTOMATIC REAR SLACK ADJUSTERS		
	41T-001	MINERAL SAE 80/90 REAR AXLE LUBE		
Rear Suspension				
N	622-1DF	30,000# FLAT LEAF SPRING REAR SUSPENSION WITH HELPER AND RADIUS ROD		230

Application Version 11.2.313
Data Version PRL-23M.025
downing 21 33k

Prepared for:
SALES DEPARTMENT
Downing Sales Service Bb
3 Indigo Rd

Phillipsburg, MO 65722
Phone: 417 589 6227

Data Code	Description	Weight Front	Weight Rear
621-001	SPRING SUSPENSION - NO AXLE SPACERS		
431-001	STANDARD AXLE SEATS IN AXLE CLAMP GROUP		
623-005	FORE/AFT CONTROL RODS		
Brake System			
018-002	AIR BRAKE PACKAGE		
490-100	WABCO 4S/4M ABS		
871-001	REINFORCED NYLON, FABRIC BRAID AND WIRE BRAID CHASSIS AIR LINES		
904-001	FIBER BRAID PARKING BRAKE HOSE		
412-001	STANDARD BRAKE SYSTEM VALVES		
46D-002	STANDARD AIR SYSTEM PRESSURE PROTECTION SYSTEM		
413-002	STD U.S. FRONT BRAKE VALVE		
432-003	RELAY VALVE WITH 5-8 PSI CRACK PRESSURE, NO REAR PROPORTIONING VALVE		
480-088	WABCO SYSTEM SAVER HP WITH INTEGRAL AIR GOVERNOR AND HEATER		
479-015	AIR DRYER FRAME MOUNTED		
460-008	STEEL AIR BRAKE RESERVOIRS MOUNTED INSIDE RAIL		
607-001	CLEAR FRAME RAILS FROM BACK OF CAB TO FRONT REAR SUSPENSION BRACKET BOTH RAILS OUTBOARD		
477-001	PULL CABLE ON WET TANK, PETCOCK DRAIN VALVES ON ALL OTHER AIR TANKS		
Trailer Connections			
335-004	UPGRADED CHASSIS MULTIPLEXING UNIT		
32A-002	UPGRADED BULKHEAD MULTIPLEXING UNIT		
Wheelbase & Frame			
545-517	5175MM (204 INCH) WHEELBASE		
546-101	11/32X3-1/2X10-15/16 INCH STEEL FRAME (8.73MMX277.8MM/0.344X10.94 INCH) 120KSI	170	110
552-045	2025MM (80 INCH) REAR FRAME OVERHANG		
55W-007	FRAME OVERHANG RANGE: 71 INCH TO 80 INCH	-20	90
AC8-99D	CALC'D BACK OF CAB TO REAR SUSP C/L (CA) : 138.19 in		
AE8-99D	CALCULATED EFFECTIVE BACK OF CAB TO REAR SUSPENSION C/L (CA) : 135.19 in		
AE4-99D	CALC'D FRAME LENGTH - OVERALL : 322.42		
FSS-0LH	CALCULATED FRAME SPACE LH SIDE : 78.28 in		

Prepared for:
SALES DEPARTMENT
Downing Sales Service Bb
3 Indigo Rd

Phillipsburg, MO 65722
Phone: 417 589 6227

Data Code	Description	Weight Front	Weight Rear
FSS-0RH	CALCULATED FRAME SPACE RH SIDE : 208.52 in		
AM6-99D	CALC'D SPACE AVAILABLE FOR DECKPLATE : 138.45 in		
553-001	SQUARE END OF FRAME		
550-001	FRONT CLOSING CROSSMEMBER		
559-001	STANDARD WEIGHT ENGINE CROSSMEMBER		
561-001	STANDARD CROSSMEMBER BACK OF TRANSMISSION		
562-001	STANDARD MIDSHIP #1 CROSSMEMBER(S)		
572-001	STANDARD REARMOST CROSSMEMBER		
565-001	STANDARD SUSPENSION CROSSMEMBER		
Chassis Equipment			
556-1CU	THREE-PIECE 14 INCH PAINTED STEEL BUMPER WITH COLLAPSIBLE ENDS, SPACED 3 INCHES FORWARD	40	
558-001	FRONT TOW HOOKS - FRAME MOUNTED	15	
574-001	BUMPER MOUNTING FOR SINGLE LICENSE PLATE		
586-024	FENDER AND FRONT OF HOOD MOUNTED FRONT MUDFLAPS		
551-007	GRADE 8 THREADED HEX HEADED FRAME FASTENERS		
Fuel Tanks			
204-034	80 GALLON/302 LITER RECTANGULAR ALUMINUM FUEL TANK - LH	40	10
218-005	RECTANGULAR FUEL TANK(S)		
215-005	PLAIN ALUMINUM/PAINTED STEEL FUEL/HYDRAULIC TANK(S) WITH PAINTED BANDS		
212-007	FUEL TANK(S) FORWARD		
664-001	PLAIN STEP FINISH		
205-001	FUEL TANK CAP(S)		
122-1H4	DETROIT FUEL/WATER SEPARATOR WITH WATER IN FUEL SENSOR AND 12 VOLT PREHEATER	-5	
216-020	EQUIFLO INBOARD FUEL SYSTEM		
202-016	HIGH TEMPERATURE REINFORCED NYLON FUEL LINE		
221-001	FUEL COOLER	10	
Tires			
093-1YX	CONTINENTAL HSC3 11R22.5 16 PLY RADIAL FRONT TIRES	48	

Prepared for:
SALES DEPARTMENT
Downing Sales Service Bb
3 Indigo Rd

Phillipsburg, MO 65722
Phone: 417 589 6227

Data Code	Description	Weight Front	Weight Rear
094-1YV	CONTINENTAL HDC3 11R22.5 16 PLY RADIAL REAR TIRES		96
Hubs			
418-060	CONMET PRESET PLUS PREMIUM IRON FRONT HUBS		
450-060	CONMET PRESET PLUS PREMIUM IRON REAR HUBS		
Wheels			
502-523	MAXION WHEELS 90262 22.5X8.25 10-HUB PILOT 6.19 INSET 5-HAND STEEL DISC FRONT WHEELS	18	
505-523	MAXION WHEELS 90262 22.5X8.25 10-HUB PILOT 5-HAND STEEL DISC REAR WHEELS		36
496-011	FRONT WHEEL MOUNTING NUTS		
497-011	REAR WHEEL MOUNTING NUTS		
Cab Exterior			
829-071	106 INCH BBC FLAT ROOF ALUMINUM CONVENTIONAL CAB		
650-008	AIR CAB MOUNTING		
678-001	LH AND RH GRAB HANDLES		
646-023	HOOD MOUNTED CHROMED PLASTIC GRILLE		
65X-001	ARGENT SILVER HOOD MOUNTED AIR INTAKE GRILLE		
644-004	FIBERGLASS HOOD		
727-1AH	SINGLE 14 INCH ROUND POLISHED AIR HORN ROOF MOUNTED	4	
726-001	SINGLE ELECTRIC HORN		
728-001	SINGLE HORN SHIELD		
657-001	DOOR LOCKS AND IGNITION SWITCH KEYED THE SAME		
78G-002	KEY QUANTITY OF 2		
575-001	REAR LICENSE PLATE MOUNT END OF FRAME		
312-038	INTEGRAL HEADLIGHT/MARKER ASSEMBLY WITH CHROME BEZEL		
302-001	(5) AMBER MARKER LIGHTS		
294-046	OMIT STOP/TAIL/BACKUP LIGHTS AND PROVIDE WIRING WITH SEPARATE STOP/TURN WIRES TO 4 FEET BEYOND END OF FRAME		-5
300-015	STANDARD FRONT TURN SIGNAL LAMPS		
744-1BG	DUAL WEST COAST MOLDED-IN COLOR HEATED MIRRORS		
797-001	DOOR MOUNTED MIRRORS		

Prepared for:
SALES DEPARTMENT
Downing Sales Service Bb
3 Indigo Rd

Phillipsburg, MO 65722
Phone: 417 589 6227

Data Code	Description	Weight Front	Weight Rear
796-001	102 INCH EQUIPMENT WIDTH		
743-1AP	LH AND RH 8 INCH MOLDED-IN COLOR CONVEX MIRRORS MOUNTED UNDER PRIMARY MIRRORS		
729-001	STANDARD SIDE/REAR REFLECTORS		
677-016	DUAL LEVEL CAB ENTRY STEPS ON BOTH SIDES		
275-063	2-STAGE ELECTRIC HORN AND HAZARD LAMP ALERT CONTROLLED BY PARTICULATE FILTER REGENERATION REQUIRED STATUS		
768-043	63X14 INCH TINTED REAR WINDOW		
661-004	TINTED DOOR GLASS LH AND RH WITH TINTED OPERATING WING WINDOWS		
654-003	MANUAL DOOR WINDOW REGULATORS		
663-019	1-PIECE ROPED-IN SOLAR GREEN GLASS WINDSHIELD		
659-019	2 GALLON WINDSHIELD WASHER RESERVOIR WITHOUT FLUID LEVEL INDICATOR, FRAME MOUNTED		
Cab Interior			
707-1AK	OPAL GRAY VINYL INTERIOR		
706-013	MOLDED PLASTIC DOOR PANEL		
708-013	MOLDED PLASTIC DOOR PANEL		
772-006	BLACK MATS WITH SINGLE INSULATION		
785-001	DASH MOUNTED ASH TRAYS AND LIGHTER		
691-008	FORWARD ROOF MOUNTED CONSOLE WITH UPPER STORAGE COMPARTMENTS WITHOUT NETTING		
694-010	IN DASH STORAGE BIN		
742-007	(2) CUP HOLDERS LH AND RH DASH		
680-006	GRAY/CHARCOAL FLAT DASH		
860-004	SMART SWITCH EXPANSION MODULE		
720-002	2-1/2 LB. FIRE EXTINGUISHER	5	
700-002	HEATER, DEFROSTER AND AIR CONDITIONER		
701-001	STANDARD HVAC DUCTING		
703-005	MAIN HVAC CONTROLS WITH RECIRCULATION SWITCH		
170-015	STANDARD HEATER PLUMBING		
130-041	VALEO HEAVY DUTY A/C REFRIGERANT COMPRESSOR		
702-002	BINARY CONTROL, R-134A		
739-033	STANDARD INSULATION		

Prepared for:
SALES DEPARTMENT
Downing Sales Service Bb
3 Indigo Rd

Phillipsburg, MO 65722
Phone: 417 589 6227

Data Code	Description	Weight Front	Weight Rear
285-013	SOLID-STATE CIRCUIT PROTECTION AND FUSES		
280-007	12V NEGATIVE GROUND ELECTRICAL SYSTEM		
324-014	DOME LIGHT WITH 3-WAY SWITCH ACTIVATED BY LH AND RH DOORS		
655-001	CAB DOOR LATCHES WITH MANUAL DOOR LOCKS		
284-023	(1) 12 VOLT POWER SUPPLY IN DASH		
722-002	TRIANGULAR REFLECTORS WITHOUT FLARES	10	
756-1J3	BASIC HIGH BACK AIR SUSPENSION DRIVER SEAT WITH MECHANICAL LUMBAR AND INTEGRATED CUSHION EXTENSION	30	
760-235	2 MAN TOOL BOX MID BACK NON SUSPENSION PASSENGER SEAT	20	
711-004	LH AND RH INTEGRAL DOOR PANEL ARMRESTS		
758-014	BLACK CORDURA PLUS CLOTH DRIVER SEAT COVER		
761-014	BLACK CORDURA PLUS CLOTH PASSENGER SEAT COVER		
763-101	BLACK SEAT BELTS		
532-002	ADJUSTABLE TILT AND TELESCOPING STEERING COLUMN	10	
540-015	4-SPOKE 18 INCH (450MM) STEERING WHEEL		
765-002	DRIVER AND PASSENGER INTERIOR SUN VISORS		
Instruments & Controls			
732-004	GRAY DRIVER INSTRUMENT PANEL		
734-004	GRAY CENTER INSTRUMENT PANEL		
87L-003	ENGINE REMOTE INTERFACE WITH PARK BRAKE AND NEUTRAL INTERLOCKS		
870-001	BLACK GAUGE BEZELS		
486-001	LOW AIR PRESSURE INDICATOR LIGHT AND AUDIBLE ALARM		
840-002	2 INCH PRIMARY AND SECONDARY AIR PRESSURE GAUGES		
198-025	INTAKE MOUNTED AIR RESTRICTION INDICATOR WITHOUT GRADUATIONS		
149-013	ELECTRONIC CRUISE CONTROL WITH SWITCHES IN LH SWITCH PANEL		
156-007	KEY OPERATED IGNITION SWITCH AND INTEGRAL START POSITION; 4 POSITION OFF/RUN/START/ACCESSORY		
811-042	ICU3S, 132X48 DISPLAY WITH DIAGNOSTICS, 28 LED WARNING LAMPS AND DATA LINKED		

Air Ride Drive SEAT

Prepared for:
SALES DEPARTMENT
Downing Sales Service Bb
3 Indigo Rd

Phillipsburg, MO 65722
Phone: 417 589 6227

Data Code	Description	Weight Front	Weight Rear
160-038	HEAVY DUTY ONBOARD DIAGNOSTICS INTERFACE CONNECTOR LOCATED BELOW LH DASH		
844-001	2 INCH ELECTRIC FUEL GAUGE		
148-070	ENGINE REMOTE INTERFACE WITH PRESET FAST IDLE		
163-001	ENGINE REMOTE INTERFACE CONNECTOR AT BACK OF CAB		
856-001	ELECTRICAL ENGINE COOLANT TEMPERATURE GAUGE		
864-001	2 INCH TRANSMISSION OIL TEMPERATURE GAUGE		
830-017	ENGINE AND TRIP HOUR METERS INTEGRAL WITHIN DRIVER DISPLAY		
372-043	(1) DASH MOUNTED PTO SWITCH WITH INDICATOR LAMP - PARK BRAKE AND NEUTRAL INTERLOCK	10	
852-002	ELECTRIC ENGINE OIL PRESSURE GAUGE		
746-114	AM/FM/WB WORLD TUNER RADIO WITH AUXILIARY INPUT, J1939	10	
747-001	DASH MOUNTED RADIO		
750-002	(2) RADIO SPEAKERS IN CAB		
753-001	AM/FM ANTENNA MOUNTED ON FORWARD LH ROOF		
810-027	ELECTRONIC MPH SPEEDOMETER WITH SECONDARY KPH SCALE, WITHOUT ODOMETER		
817-001	STANDARD VEHICLE SPEED SENSOR		
812-001	ELECTRONIC 3000 RPM TACHOMETER		
162-011	IDLE LIMITER, ELECTRONIC ENGINE		
329-091	(6) IGN CONTROLLED EXTRA SWITCHES WITH IND LIGHTS WIRED TO POWER DIST BOX WITH RELAYS PROVIDING 20 AMPS PER CIRCUIT TO JUNCTION BLOCK AND 1 CIRCUIT AT 30 AMPS		
81Y-001	PRE-TRIP LAMP INSPECTION, ALL OUTPUTS FLASH, WITH SMART SWITCH		
883-009	WORK BRAKE WITH RETURN TO GEAR, AUTO NEUTRAL, FOR DRIVE AXLE SERVICE BRAKES		
836-015	DIGITAL VOLTAGE DISPLAY INTEGRAL WITH DRIVER DISPLAY		
660-008	SINGLE ELECTRIC WINDSHIELD WIPER MOTOR WITH DELAY		
304-001	MARKER LIGHT SWITCH INTEGRAL WITH HEADLIGHT SWITCH		

Prepared for:
SALES DEPARTMENT
Downing Sales Service Bb
3 Indigo Rd

Phillipsburg, MO 65722
Phone: 417 589 6227

Data Code	Description	Weight Front	Weight Rear
882-018	ONE VALVE PARKING BRAKE SYSTEM WITH DASH VALVE CONTROL AUTONEUTRAL AND WARNING INDICATOR		
299-013	SELF CANCELING TURN SIGNAL SWITCH WITH DIMMER, WASHER/WIPER AND HAZARD IN HANDLE		
298-039	INTEGRAL ELECTRONIC TURN SIGNAL FLASHER WITH HAZARD LAMPS OVERRIDING STOP LAMPS		
Design			
065-000	PAINT: ONE SOLID COLOR		
Color			
980-5F6	CAB COLOR A: L0006EY WHITE ELITE EY		
986-020	BLACK, HIGH SOLIDS POLYURETHANE CHASSIS PAINT		
962-972	POWDER WHITE (N0006EA) FRONT WHEELS/RIMS (PKWHT21, TKWHT21, W, TW)		
966-972	POWDER WHITE (N0006EA) REAR WHEELS/RIMS (PKWHT21, TKWHT21, W, TW)		
964-6Z7	BUMPER PAINT: FP24812 ARGENT SILVER DUPONT FLEX		
963-003	STANDARD E COAT/UNDERCOATING		
Certification/Compliance			
996-001	U.S. FMVSS CERTIFICATION, EXCEPT SALES CABS AND GLIDER KITS		
Secondary Factory Options			
998-001	CORPORATE PDI CENTER IN-SERVICE ONLY		
999-014	DEALER HAS BEEN ADVISED OF AND ACCEPTED RESPONSIBILITY FOR MODIFICATIONS DUE TO POSSIBLE PTO/CHASSIS INTERFERENCE		
Raw Performance Data			
AE8-99D	CALCULATED EFFECTIVE BACK OF CAB TO REAR SUSPENSION C/L (CA) : 135.19 in		
AM6-99D	CALC'D SPACE AVAILABLE FOR DECKPLATE : 138.45 in		
Sales Programs			
	NO SALES PROGRAMS HAVE BEEN SELECTED		

T O T A L V E H I C L E S U M M A R Y

Prepared for:
SALES DEPARTMENT
Downing Sales Service Bb
3 Indigo Rd

Phillipsburg, MO 65722
Phone: 417 589 6227

Weight Summary

	Weight Front	Weight Rear	Total Weight
Factory Weight+	7168 lbs	4235 lbs	11403 lbs
Total Weight+	7168 lbs	4235 lbs	11403 lbs

ITEMS NOT INCLUDED IN PRICE

Other Factory Charges

RAG-020	CUMMINS TARIFF CHARGE - $205	$205.00
P73-2FT	STANDARD DESTINATION CHARGE	$2,200.00

Extended Warranty

WAG-010	TOWING: 1 YEAR/UNLIMITED MILES/KM EXTENDED TOWING COVERAGE $550 CAP FEX APPLIES	$200.00

Currency Exchange Rate	1.0000
Total Extended Warranty (Local Currency)	$200.00

(+) Weights shown are estimates only.
If weight is critical, contact Customer Application Engineering.

(**) Prices shown do not include taxes, fees, etc... "Net Equipment Selling Price" is located on the Quotation Details Proposal Report.

(***) All cost increases for major components (Engines, Transmissions, Axles, Front and Rear Tires) and government mandated requirements, tariffs, and raw material surcharges will be passed through and added to factory invoices.

Prepared for:
SALES DEPARTMENT
Downing Sales Service Bb
3 Indigo Rd

Phillipsburg, MO 65722
Phone: 417 589 6227

DIMENSIONS

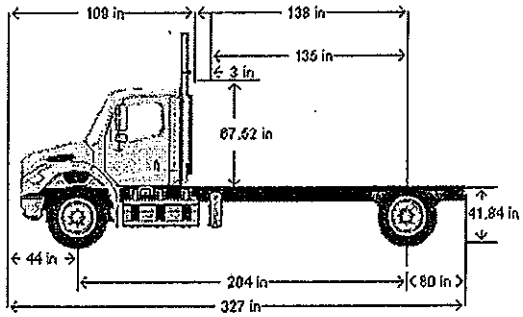

VEHICLE SPECIFICATIONS SUMMARY - DIMENSIONS

Model.....M2106
Wheelbase (545) ..... 5175MM (204 INCH) WHEELBASE
Rear Frame Overhang (552).....2025MM (80 INCH) REAR FRAME OVERHANG
Fifth Wheel (578) .....NO FIFTH WHEEL
- Mounting Location (577).....NO FIFTH WHEEL LOCATION
- Maximum Forward Position (in).....0
- Maximum Rearward Position (in) 0
- Amount of Slide Travel (in).....0
- Slide Increment (in).....0
- Desired Slide Position (in).....0.0

Cab Size (829).....106 INCH BBC FLAT ROOF ALUMINUM CONVENTIONAL CAB
Sleeper (682)..... NO SLEEPER BOX/SLEEPERCAB
Exhaust System (016)..... RH OUTBOARD UNDER STEP MOUNTED HORIZONTAL AFTERTREATMENT SYSTEM ASSEMBLY WITH RH B-PILLAR MOUNTED VERTICAL TAILPIPE

TABLE SUMMARY - DIMENSIONS

Prepared for:
SALES DEPARTMENT
Downing Sales Service Bb
3 Indigo Rd

Phillipsburg, MO 65722
Phone: 417 589 6227

Dimensions	Inches
Bumper to Back of Cab (BBC)	109.3
Bumper to Centerline of Front Axle (BA)	43.7
Min. Cab to Body Clearance (CB)	3.0
Back of Cab to Centerline of Rear Axle(s) (CA)	138.2
Effective Back of Cab to Centerline of Rear Axle(s) (Effective CA)	135.2
Back of Cab Protrusions (Exhaust/Intake) (CP)	0.0
Back of Cab Protrusions (Side Extenders/Trim Tab) (CP)	0.0
Back of Cab Protrusions (CNG Tank)	0.0
Back of Cab Clearance (CL)	3.0
Back of Cab to End of Frame	217.9
Cab Height (CH)	67.5
Wheelbase (WB)	203.7
Frame Overhang (OH)	79.7
Overall Length (OAL)	327.2
Rear Axle Spacing	0.0
Unladen Frame Height at Centerline of Rear Axle	41.8

Performance calculations are estimates only. If performance calculations are critical, please contact Customer Application Engineering.

Application Version 11.2.313
Data Version PRL-23M.025
downing 21 33k

Prepared for: Wayne Robinson
City of Chanute
Prepared by: DAN KELLY
07/18/2020

Merle Kelly Ford | 3501 S Santa Fe Chanute Kansas | 667203240

2021 F-750 Diesel Regular Cab Base (F7D)

Price Level: 120 | Quote ID: NewWayRL1

Pricing Summary - Single Vehicle

		MSRP
Vehicle Pricing		
Base Vehicle Price		$70,945.00
Options & Colors		$8,330.00
Upfitting		$0.00
Destination Charge		$2,095.00
Subtotal		$81,370.00
Pre-Tax Adjustments		
Code	**Description**	
Gov D	City of Chanute Municipal Discount	-$13,500.00
Newway	New Way 18 Yd Rear Loader	$65,877.00
See attached New Way specs and literature for detailed info		
Trade	2009 Sterling 18yd Loadmaster RL	-$26,500.00
Total		$107,247.00

Customer Signature

Acceptance Date

Prices and content availability as shown are subject to change and should be treated as estimates only. Actual base vehicle, package and option pricing may vary from this estimate because of special local pricing, availability or pricing adjustments not reflected in the dealer's computer system. See salesperson for the most current information.

Prepared for: Wayne Robinson
City of Chanute
Prepared by: DAN KELLY
07/18/2020

Merle Kelly Ford | 3501 S Santa Fe Chanute Kansas | 667203240

2021 F-750 Diesel Regular Cab Base (F7D)

Price Level: 120 | Quote ID: NewWayRL1

As Configured Vehicle

Code	Description	MSRP
Base Vehicle		
F7D	Base Vehicle Price (F7D)	$70,945.00
Engines		
99C	6.7L Power Stroke V8 Turbo Diesel - 270 HP @ 2400 RPM Includes Engine Exhaust Brake and manual regen capability. Torque: 700 ft.lbs. @ 1500 rpm. *Governed RPM: 3200. Includes CARB clean idle label - may be removed if un-necessary.*	STD
425	50-State Emissions	N/C
41H	Engine Block Heater, Phillips, 120 Volt/750 Watt	$60.00
98R	Active Regen Control *Allows Driver to Inhibit Automatic Regen until Regen can be performed in a Safe location.*	$205.00
Transmissions		
44G	Ford TorqShift HD 6-Speed Automatic - Double Overdrive, less PTO Provision, less Park Pawl	STD
41A	Transmission Power Take-Off Provision w/LiveDrive Capability and Tow/Haul	$895.00
Front Wheels & Tires		
643	Wheels, Front 22.5x8.25 White Powder Coated Steel, 10-Hole *(285.75MM BC) hub piloted, flanged nut, metric mount, 8.25 DC rims; with steel hubs.*	STD
T2A	Tires, Front Two 11R22.5H Goodyear Fuel Max RSA (497 rev/mile)	$45.00
Rear Wheels & Tires		
663	Wheels, Rear 22.5x8.25 White Powder Coated Steel, 10-Hole *(285.75MM BC) hub piloted, flanged nut, metric mount, 8.25 DC rims; with steel hubs.*	STD

Prices and content availability as shown are subject to change and should be treated as estimates only. Actual base vehicle, package and option pricing may vary from this estimate because of special local pricing, availability or pricing adjustments not reflected in the dealer's computer system. See salesperson for the most current information.

2021 F-750 Diesel Regular Cab Base (F7D)

Price Level: 120 | Quote ID: NewWayRL1

As Configured Vehicle (cont'd)

Code	Description	MSRP
R2H	Tires, Rear Four 11R22.5H Goodyear Fuel Max RTD (493 rev/mile)	$175.00
Brakes		
67A	Air Brakes - Straight Truck w/Traction Control *Meritor Q-Plus with ABS, Bendix Anti-Lock Brake System, 4-channel. Includes 15" x 4" front brakes, dual direct reading air pressure gauges, brake lines color coded nylon. Bendix 13.2 CFM capacity air compressor, instrument panel mounted yellow knob parking brake control valve, automatic slack adjusters front and rear, two rear spring parking air brake chambers mounted on front of rear axle, three drain valves and two air tanks (Reference Body Builders Book for location). Rear brake size and components dependent upon axle selection. Uses existing ABS system to minimize wheel slipping during acceleration. Usage determined by the air brake package selected. (Should NEVER be used with Hi-Rail Train Systems).* *Includes:* *- Air Dryer, Bendix AD/IS w/Heater* *Mounted left frame rail (for Hydraulic brake diesel applications that include air suspension or stand alone engine air compressor).*	$2,180.00
62D	Air Dryer, Bendix AD/IS w/Heater *Mounted left frame rail (for Hydraulic brake diesel applications that include air suspension or stand alone engine air compressor).*	Included
Front Axle and Suspension		
43N	10,000 lb. Cap. Non-Driving - Dana E-1002I - I-Beam Type	STD
61C	Taper-Leaf Springs, Parabolic - 10,000 lb. Cap *2-leaf, 62" x 3.15". Also includes, standard duty, dual, double acting shock absorbers.*	STD
Rear Axle and Suspension		
47P	23,000 lb. Single Reduction - Locking - Dana / Spicer S23-172D *NOTE: When specifying an axle ratio, check performance guidelines for startability and gradeability.*	$2,100.00
18P	Driveshaft Upgrade *A heavy duty drive line is optional. Heavy duty drive line components are required in more demanding applications, such as higher torque engines or deep reduction low gear(s). The heavier SPL-140 driveshaft is powertrain dependent and should be used when more durability is required by the vocation or customer.*	$185.00
68T	Multi-Leaf Springs - 31,000 lb. Cap *11-leaf. Includes 2,000 lb auxiliary springs for load stabilization.*	$490.00
X6A	6.14 Axle Ratio	N/C
Wheelbase		

Prices and content availability as shown are subject to change and should be treated as estimates only. Actual base vehicle, package and option pricing may vary from this estimate because of special local pricing, availability or pricing adjustments not reflected in the dealer's computer system. See salesperson for the most current information.

2021 F-750 Diesel Regular Cab Base (F7D)

Price Level: 120 | Quote ID: NewWayRL1

As Configured Vehicle (cont'd)

Code	Description	MSRP
194WB	194" Wheelbase/120" CA/75" AF/308" OAL	$325.00
Frame		
536	Single Channel - Straight 'C' 14.18 SM, 120,000 PSI *1,701.600 RBM. Heat treated alloy steel; 10.125" x 3.580" x 0.312" (257.2mm x 90.9mm x 8.0mm).*	$365.00
Exhaust		
91G	Under Cab, Right Side Outlet, Switchback-Style *Single, horizontal muffler, right side. under cab. outside of frame rail with rear discharge.*	STD
Fuel Tanks		
65B	Fuel Tank - LH 50 Gallon Rectangular - Aluminum	STD
12	12 Gal. Single Tank Fuel Fill. Mandatory Charge Applied, Based On Tank Selection	$0.00
Electrical / Alternator / Battery		
STDALT	Extra Heavy Duty Alternator - 12-Volt, 200 Amp Denso SC5	Included
63B	Battery - Two 900 CCA, 1800 Total, Includes Steel Battery Box *12Volt, Motorcraft.*	$60.00
59C	Body Builder Wiring - At End of Frame, Combined - (ILO Standard - Back of Cab Combined) *Includes sealed connectors for 2 ground circuits, with combined left/stop, combined right/stop. stop lamps, back up lamps. Also includes 2 additional pass through wires to cab.*	$135.00
Seats		
88G	30/70 Air Ride Driver (External Air Source) & Fixed 2-Passenger Bench - Vinyl	$395.00

Prices and content availability as shown are subject to change and should be treated as estimates only. Actual base vehicle, package and option pricing may vary from this estimate because of special local pricing, availability or pricing adjustments not reflected in the dealer's computer system. See salesperson for the most current information.

Prepared for: Wayne Robinson
City of Chanute
Prepared by: DAN KELLY
07/18/2020

Merle Kelly Ford | 3501 S Santa Fe Chanute Kansas | 667203240

2021 F-750 Diesel Regular Cab Base (F7D)

Price Level: 120 | Quote ID: NewWayRL1

As Configured Vehicle (cont'd)

Code	Description	MSRP
Cab Interior		
600A	Preferred Equipment Package 600A *Includes:* *- Bumper, Front - Black, Full Width* *- Wheel Seals, Front - Oil lubricated, SKF ScotSeal PlusXL Seals* *- Wheel Seals, Rear - Oil lubricated, SKF ScotSeal PlusXL Seals* *- Manual Regen Initiation - Driver Interface in Message Center* *- Engine Exhaust Brake* *- Extra Heavy Duty Alternator - 12-Volt, 200 Amp Denso SC5* *- Painted Grille - Plastic* *- Lights - Roof Marker/Clearance - Amber Lenses, 5 Lights* *- Tow Hooks, Front (2) - Frame-Mounted, Painted Black* *- Four Body Builder Switches - Mounted in Center Instrument Panel With connector access located in engine compartment. Amperages vary by switch: 10, 15, 25, 25.* *- Floor Covering - Black Vinyl* *- Intelligent Oil Life Monitor* *- Steering Column - Tilt / Telescoping* *- Steering Wheel - Black PVC w/Integral Cruise Control Switches, includes Audio Controls*	N/C
90P	Power Equipment Group - (Included in (90A) Appearance Group) *Includes power front side windows, power door locks and door trim panel.*	$470.00
588	Radio: AM/FM Stereo w/2 Speakers, USB input, Clock Display and Bluetooth	STD
Cab Exterior		
54P	Mirrors, Dual - Heated & Motorized Rectangular, XL2020 - 96" Width *Integral spot mirror, sail type, solid black finish.*	$245.00
Miscellaneous		
PAINT	Paint Type - Environmentally Friendly, "3 - Wet System"	STD
Interior Colors		
E_01	Gray	N/C
Primary Colors		
YZ_01	Oxford White	N/C
SUBTOTAL		$79,275.00
Destination Charge		$2,095.00

Prices and content availability as shown are subject to change and should be treated as estimates only. Actual base vehicle, package and option pricing may vary from this estimate because of special local pricing, availability or pricing adjustments not reflected in the dealer's computer system. See salesperson for the most current information.

2021 F-750 Diesel Regular Cab Base (F7D)

Price Level: 120 | Quote ID: NewWayRL1

As Configured Vehicle (cont'd)

Code	Description	MSRP
TOTAL		$81,370.00

Prices and content availability as shown are subject to change and should be treated as estimates only. Actual base vehicle, package and option pricing may vary from this estimate because of special local pricing, availability or pricing adjustments not reflected in the dealer's computer system. See salesperson for the most current information.

2021 F-750 Diesel Regular Cab Base (F7D)

Price Level: 120 | Quote ID: NewWayRL1

Warranty

Standard Warranty

Basic			
Distance	Unlimited miles	Months	24 months
Powertrain			
Distance	Unlimited miles	Months	24 months
Corrosion Perforation			
Distance	Unlimited miles	Months	36 months
Roadside Assistance			
Distance	Unlimited miles	Months	24 months
Diesel Engine			
Distance	250,000 miles	Months	60 months
Transmission			
Distance	250,000 miles	Months	60 months
Frame Rail			
Distance	Unlimited miles	Months	60 months

Prices and content availability as shown are subject to change and should be treated as estimates only. Actual base vehicle, package and option pricing may vary from this estimate because of special local pricing, availability or pricing adjustments not reflected in the dealer's computer system. See salesperson for the most current information.

CHANUTE CITY COMMISSION
REGULAR MEETING
MONDAY, AUGUST 10, 2020

AGENDA ITEM – 9E

ITEM: New Business

SUBJECT: Consider Approval to Purchase Sewer Truck

BACKGROUND: During our budget work sessions staff presented commissioners with a request to replace the Water Department's 2009 Sterling/Vac-Con. This unit is in desperate need of replacement and extremely costly to run due to yearly maintenance repairs. The Vac-Con is a frequent visitor in the mechanic shop and accumulating expensive equipment repairs out of vehicle services.

ANALYSIS: Attached is a quote from RED for the commissioner's review.

FINANCIAL CONSIDERATION: Cap Lease purchase through Utility Department's annual budget.

LEGAL CONSIDERATION: N/A

RECOMMENDATION: Approval to purchase new Vac-Con.

RED
Municipal & Industrial Equipment Co

5206 East 9th Street
Kansas City, MO 64124
(o) 816-231-2005
(f) 816-461-8511

Quotation

DATE: July 16, 2020

Contact Information:

Customer: City Of Chanute Kansas
Contact: Mike Letterman
Address: 1002 East 14th Street
Chanute, KS 66720

Office: (620) 431-5250
Fax:
Cell: (620) 212-9670
Email: mletterman@chanuteks.org

Reference Bid #:

Description: 2020 Vac-Con Single Engine Demo Unit On Freightliner Chassis VA390LHAN/1000

Red Municipal and Industrial Equipment Co is pleased to offer the following quote for the above mentioned equipment:

ITEM NO	QTY	Cost per Unit	DESCRIPTION:	BID PRICE
			2020 Vac-Con Demo Unit	380,000.00
				0.00
				0.00
				0.00
			Delivery & Training Included	0.00

Deduction of Trade-In -20,000.00
Additional Option
Additional Option
Total* $360,000.00

Option #1 3yrs./200,000mi. ext. warranty: Includes- 3yrs. towing, Cummins-ISL370 3yr./150,000mi. (PP1 W/Aftertreatment), Allison 3000 5yrs./UNLmi.
Option #2
Option #3

* This amount does not include any shipping/handling/tax charges if applicable

Levi Williams
Signature: Red Municipal and Industrial Equipment Co

Accepted By

Please attach formal Purchase Order to this signed Quotation as acceptance of this Quotation and the Terms and Conditions attached.

Purchase Order #

CHANUTE CITY COMMISSION
REGULAR MEETING
MONDAY, AUGUST 10, 2020

AGENDA ITEM – 9F

ITEM: New Business

SUBJECT: Consider Approval to Purchase Loader

BACKGROUND: During our budget work sessions staff presented commissioners with a request to replace the Landfill's 2004 CAT IT14G FRONT-END LOADER. This unit has over 16,000 hours and a running list of repairs that are increasing expenses to vehicle services bottom line. The new front-end loader will be delivered to Street Department and their current front-end loader will be transferred to the landfill.

ANALYSIS: Attached is a quote from Foley Equipment for the commissioner's review.

FINANCIAL CONSIDERATION: Cap Lease purchase through the Equipment Reserve Fund.

LEGAL CONSIDERATION: N/A

RECOMMENDATION: Approval to purchase 914M Wheel Loader.

CITY OF CHANUTE

Budgetary Quote Landfill 914m

Abstract

Machine quoted is for a replacement for the landfill. Machine is quoted with a multipurpose bucket and hard tires. This is for budgetary purpose based on the configuration attached.

Lease to Lease price is $31,345 per year for 5 years / 1000 hours per year payment in advance
Outright Purchase price $176,813

Archie Moffet
armoffet@foleyeq.com

Quote 177768-02
July 17, 2020

CITY OF CHANUTE
PO BOX 907
CHANUTE
Kansas
66720-0907

Attention: WAYNE ROBINSON

Dear Sir,

We would like to thank you for your interest in our company and our products, and are pleased to quote the following for your consideration.

Caterpillar Model: 914M WheelLoaders

STOCK NUMBER:	SERIAL NUMBER:	YEAR:	SMU:

We wish to thank you for the opportunity of quoting on your equipment needs. This quote is contingent upon Customer's acceptance of Foley's standard terms and conditions. This quotation is valid for 30 days, after which time we reserve the right to re-quote. If there are any questions, please do not hesitate to contact me.

*2020 budgetary quote

Sincerely,

Archie Moffet
Regional Sales Representative

Caterpillar Model: 914M WheelLoaders

STANDARD EQUIPMENT

POWERTRAIN, Cat C4.4 ACERT Engine, -Common rail fuel injection, -U.S. EPA Tier 4 Final/ EU Stage 4, Caterpillar NOx Reduction System, Fuel: Ultra Low Sulphur Diesel @ <15ppm, Engine Oil: Cj-4, Electric fuel pump with 4 micron, filtration, S.O.S port, transmission oil, Hydrostatic transmission,, 20 km/h (12.5mpr/h, Lube for life universal joints, Forward - Neutral - Reverse on joystick, 100% locking differentials, whilst, moving, Air cleaner, radial seal, dual filters, Cooling fan, hydraulic on demand, Intergrated Cyclone pre-cleaner

HYDRAULICS, Two valve, single lever joystick, Diagnostic pressure taps, SOS port, hydraulic oil, Variable displacement piston pump,hystat, and implement.,

ELECTRICAL, 150 Amp alternator, Single 850 CCA maintenance free battery, Roading lights, 12 volt direct electric starting, Battery disconnect switch,

OPERATOR ENVIRONMENT, ROPS/FOPS cab, pressurised and sound, suppressed, Hydraulic control lever lockout, Electrohydraulic implement controls, Gauges, External 12V power source

FLUIDS, Extended life coolant antifreeze, Protected to -36C (-33F) hydraulic oil, Cat Advanced Hydo 10,

OTHER STANDARD EQUIPMENT, Parallel lift, Optimised Z-Bar loader, Fenders, front and rear, Engine enclosure - lockable, Recovery hitch, Vandalism protection - locked service, points, REGIONAL STANDARDS(as required), Chocks, bucket tooth or edge guard, Decals, roading speed, Reflectors, roading, Camara, rear view, Beacon,

OPERATOR ENVIRONMENT, Internal 12V power source, Lockable Storage box with cup holder, Rear window defrost, Adjustable steering column, Tinted front glass,laminated, Wiper/washer (front & rear), Heater/defroster, - Seat belt, retractable, - adjustable height, backrest, armrest, - Fabric or Vinyl, Seat, - Action indicator, - Hydraulic oil filter bypass, - Electrical system voltage flow, - Park brake applied, - Engine malfunction, - Brake charge pressure low, Operator warning system indicators:, - DEF, - Digital Hour meter, - Speedometer, - Fuel level, - Hydraulic oil temperature, - Engine coolant temperature

MACHINE SPECIFICATIONS

Description	Reference No
914M WHEEL LOADER DCA1	550-3555
LANE 1 - AVAILABLE FROM CLAYTON PRODUCT DISTRIBUTION CENTER	

INCLUDES:

462-7420 ENGINE, C4.4, T4F, HRC	462-7420
462-7125 POWERTRAIN, HI RIMPULL, 24MPH	462-7125
462-7433 LOADER ARR, STD CPLR, STD LIFT	462-7433
463-2090 CAB, DELUXE, SINGLE BRAKE	463-2090
539-7204 SEAT, DELUXE	539-7204
462-7111 HEATER AND AIR CONDITIONER	462-7111
464-9682 STEERING, STANDARD	464-9682
550-9815 SEAT BELT, RETRACTABLE 2"	550-9815
308-0189 VALVE, DRAIN, ECO	308-0189
423-5544 LIGHTS, ROADING, RH DIP	423-5544
433-3258 SECURITY SYSTEM, NONE	433-3258
444-1001 ENG COOLANT, A/FREEZE (-50C/-58F)	444-1001
448-9539 LIGHTS, CAB, WORKING HALOGEN	448-9539
450-5405 HYDRAULIC OIL, STANDARD	450-5405
462-7340 BATTERY, HEAVY DUTY	462-7340
469-5852 FENDERS, STANDARD	469-5852
470-6214 HYDRAULICS, 3V/1L, STD LIFT	470-6214
471-6212 WORKTOOL, WIRING	471-6212
471-6763 FEATURE PACKAGE, ROAD + LOAD	471-6763
474-1980 ALARM, BACK-UP	474-1980
474-1982 HEATER, ENGINE COOLANT, 120V	474-1982
486-3775 3V QUICK DISCONNECT PUSH FIT	486-3775
504-4835 CAMERA, REAR VIEW	504-4835
508-0797 PRODUCT LINK, CELLULAR, PL240	508-0797
524-5098 FUEL, STANDARD	524-5098

TIRES, 17.5 R25, MX, L2 XTLA	385-5822
INSTRUCTIONS, ANSI	476-2741
PREP PACK, EMC	519-5211
FUEL, STANDARD	524-5098
SERIALIZED TECHNICAL MEDIA KIT	421-8926
PACK, DOMESTIC TRUCK	0P-0210
BUCKET-MP 1.4 YD3, IT, BOCE	232-2698

SELL PRICE	$176,813.17
EXT WARRANTY	Included
CSA	Included
NET BALANCE DUE	**$176,813.17**
PLUS ANY APPLICABLE TAXES	**$176,813.17**

WARRANTY

Standard Warranty:	12 months unlimited hours
Extended Warranty:	5/5000
CSA	FM200717-005

F.O.B/TERMS
Chanute, KS

PAYMENT TERMS

Outright Sale Financing Terms

CASH WITH ORDER	BALANCE TO FINANCE	TERM	PERIOD PAYMENT	RATE	DOCUMENT FEE	AMOUNT
$0.00	$177,213.17	5 (Annual)	$37,561.18	2.99	$400.00	$176,813.17

The above is subject to approval by Caterpillar Finance

Accepted by_____ **on** _____

_____
Signature

Caterpillar Financial Services Corporation

Finance Proposal

CUSTOMER

Name: City of Chanute

Address .....
City .....
State .....
Zip code .....
County .....

Good if:
Acknowledged by Aug-16-20
Funded by Aug-16-20

DEALER

FOLEY EQUIPMENT COMPANY
Sales person ..... Archie Moffet
Dealer contact .....
Telephone .....

Quote number 661-0161
Fax number .....
Quote date 07/17/2020
Quote time 14:25:08

FINANCE PROPOSAL

This is Caterpillar Financial Services Corporation's confirmation of the following finance proposal. This is a proposal only and is subject to credit approval, execution of documentation, and execution and approval of the application survey.

Financing type ..... CAT VALUE OPTION
Number of payments ..... 5 Annual
Payments ..... in Advance

Purchase option ..... Stated option
Equipment ..... Construction
Quoted by e130glm
Report created by e130glm

	Model	ADR Code	Ann. Hours	Qty	Amount Financed	Payment	Purchase Option
New	914M	15.00	1000	1	177,213.17	31,345.90	45,675.00

Special Conditions:

914M
Model Year - 2020, Standard Environment; Major Attachments-Cab, Air Conditioning; Blades/Buckets/Rippers-General Purpose Bucket

	Model	Insurance	Payment w/Insurance
New	914M	1,977.69	33,323.59

The estimate for insurance is provided through Caterpillar Insurance Company (Provided by Westchester Insurance Company in Rhode Island) and is not an offer to contract for insurance.

CONDITIONS

Insurance: The customer must provide evidence of physical damage and liability insurance in an amount and from an insurance carrier satisfactory to CFSC. CFSC must be named on the policies, as loss payee and additional insured, as applicable, and a certificate of insurance, in form and substance acceptable to CFSC, must be provided to CFSC.

Taxes: All taxes are the responsibility of the customer and may or may not be included in the above payment amounts. Under the CAT Master Tax Lease and CAT Long Term Rental Agreement, a lessee is required to indemnify the lessor for loss of tax benefits.

Equipment: The equipment cannot be delivered until all documents are executed by CFSC. All equipment must reside in the United States at all times.

Approval: This proposal is subject to, among other things, final pricing, credit approval and document approval by CFSC.

The terms and conditions outlined herein are not all-inclusive and are based upon information provided to date. This proposal may be withdrawn or modified by Lessor at anytime. This proposal does not represent an offer or commitment by CFSC to enter into a transaction or to provide financing, and does not create any obligation for CFSC. A commitment to enter into the transaction described herein may only be extended by CFSC after this transaction has been approved by all appropriate credit and other authorities within CFSC.

Caterpillar Financial Services Corporation
2120 West End Avenue, Nashville, TN 37203
(615)-341-1000

We appreciate the opportunity to provide you a proposal for this transaction.

Proposed by: Acknowledged by:

Caterpillar Financial Services Corporation	City of Chanute	Date

CHANUTE CITY COMMISSION
REGULAR MEETING
MONDAY, AUGUST 10, 2020

AGENDA ITEM – 9G

ITEM: New Business

SUBJECT: Consider Approval to Purchase Dump Trucks

BACKGROUND: During our budget work sessions staff presented commissioners with a request to replace two dump trucks in the Street Department. Both units are red tagged for mechanical failures and parts are no longer available for the worn out trucks. Both trucks will be used on a regular basis with one being equipped for snow removal and salt spreading.

ANALYSIS: Attached is two quotes from Merle Kelly Ford, one with the hydraulic setups and snow plow and the other for normal operations.

FINANCIAL CONSIDERATION: Cap lease purchase through the Street Department.

LEGAL CONSIDERATION: N/A

RECOMMENDATION: Approval to purchase new dump trucks.

Prepared for: Wayne Robinson
City of Chanute
Prepared by: DAN KELLY
07/18/2020

Merle Kelly Ford | 3501 S Santa Fe Chanute Kansas | 667203240

2021 F-750 Diesel Regular Cab Base (F7D)

Price Level: 120 | Quote ID: Chansnowpl

Pricing Summary - Single Vehicle

	MSRP
Vehicle Pricing	
Base Vehicle Price	$70,945.00
Options & Colors	$7,570.00
Upfitting	$600.00
Destination Charge	$2,095.00
Subtotal	$81,210.00

Pre-Tax Adjustments

Code	Description	
Gallion/Spreadr	10 Galion Bed with Spreader Hydraulics & Pintle Hitch	$22,891.00
10' Length, 26" tall sides, 32" tallgate with air release, 8 gauge high tensile steel const., Recessed LED ST/T lighting, Double acting under body hoist, Force America hydrualic system to operate hoist, PTO mounted pump, Cable control mounted in cab w/air tailgate valve, Painted Black, Rear Mud Flaps, Back up alarm. 3/4" Pull Plate, 30 ton pintle hitch, 6 pole trailer socket, Glad hands for trailer. Installed		
Gov D	City of Chanute Municipal Discount	-$13,500.00
Snow Plow	Snow Plow plumbing	$3,991.00
Includes valve sections, cab controls and plumb to front of plow		

Total	$94,592.00

Customer Signature

Acceptance Date

Prices and content availability as shown are subject to change and should be treated as estimates only. Actual base vehicle, package and option pricing may vary from this estimate because of special local pricing, availability or pricing adjustments not reflected in the dealer's computer system. See salesperson for the most current information.

Prepared for: Wayne Robinson
City of Chanute
Prepared by: DAN KELLY
07/18/2020

Merle Kelly Ford | 3501 S Santa Fe Chanute Kansas | 667203240

2021 F-750 Diesel Regular Cab Base (F7D)

Price Level: 120 | Quote ID: Chansnowpl

As Configured Vehicle

Code	Description	MSRP
Base Vehicle		
F7D	Base Vehicle Price (F7D)	$70,945.00
Engines		
99C	6.7L Power Stroke V8 Turbo Diesel - 270 HP @ 2400 RPM Includes Engine Exhaust Brake and manual regen capability. Torque: 700 ft.lbs. @ 1500 rpm. *Governed RPM: 3200. Includes CARB clean idle label - may be removed if un-necessary.*	STD
425	50-State Emissions	N/C
41H	Engine Block Heater, Phillips, 120 Volt/750 Watt	$60.00
98R	Active Regen Control *Allows Driver to Inhibit Automatic Regen until Regen can be performed in a Safe location.*	$205.00
Transmissions		
44G	Ford TorqShift HD 6-Speed Automatic - Double Overdrive, less PTO Provision, less Park Pawl	STD
41A	Transmission Power Take-Off Provision w/LiveDrive Capability and Tow/Haul	$895.00
Front Wheels & Tires		
643	Wheels, Front 22.5x8.25 White Powder Coated Steel, 10-Hole *(285.75MM BC) hub piloted, flanged nut, metric mount, 8.25 DC rims; with steel hubs.*	STD
T2B	Tires, Front Two 11R22.5G Goodyear Fuel Max RSA (497 rev/mile)	STD
Rear Wheels & Tires		
663	Wheels, Rear 22.5x8.25 White Powder Coated Steel, 10-Hole *(285.75MM BC) hub piloted, flanged nut, metric mount, 8.25 DC rims; with steel hubs.*	STD

Prices and content availability as shown are subject to change and should be treated as estimates only. Actual base vehicle, package and option pricing may vary from this estimate because of special local pricing, availability or pricing adjustments not reflected in the dealer's computer system. See salesperson for the most current information.

2021 F-750 Diesel Regular Cab Base (F7D)

Price Level: 120 | Quote ID: Chansnowpl

As Configured Vehicle (cont'd)

Code	Description	MSRP
R2G	Tires, Rear Four 11R22.5G Goodyear Fuel Max RTD (493 rev/mile)	$140.00
Brakes		
67A	Air Brakes - Straight Truck w/Traction Control *Meritor Q-Plus with ABS, Bendix Anti-Lock Brake System, 4-channel. Includes 15" x 4" front brakes, dual direct reading air pressure gauges, brake lines color coded nylon, Bendix 13.2 CFM capacity air compressor, instrument panel mounted yellow knob parking brake control valve, automatic slack adjusters front and rear, two rear spring parking air brake chambers mounted on front of rear axle, three drain valves and two air tanks (Reference Body Builders Book for location). Rear brake size and components dependent upon axle selection. Uses existing ABS system to minimize wheel slipping during acceleration. Usage determined by the air brake package selected. (Should NEVER be used with Hi-Rail Train Systems).* *Includes:* *- Air Dryer, Bendix AD/IS w/Heater* *Mounted left frame rail (for Hydraulic brake diesel applications that include air suspension or stand alone engine air compressor).*	$2,180.00
62D	Air Dryer, Bendix AD/IS w/Heater *Mounted left frame rail (for Hydraulic brake diesel applications that include air suspension or stand alone engine air compressor).*	Included
158	Trailer Air Brake Package *Includes air lines to rear of frame, hand control valve and tractor protection valve.*	$365.00
157	Trailer Connection Socket - 7-Way, Wired for Turn Signals, Separate of Stop *Mounted at rear of frame, for separate trailer stop, tail, turn, marker light circuits (compatible with trailers that have amber or side turn lamps with separate stop/turn).*	$100.00
Front Axle and Suspension		
43P	12,000 lb. Cap. Non-Driving - Dana E-1202I - I-Beam Type	$525.00
61D	Taper-Leaf Springs, Parabolic - 12,000 lb. Cap *2-leaf, 62" x 3.15". Also includes, standard duty, dual, double acting shock absorbers.*	$305.00
Rear Axle and Suspension		
475	21,000 lb. Single Reduction - Open - Dana / Spicer 21060S *NOTE: When specifying an axle ratio, check performance guidelines for startability and gradeability.*	STD
68R	Multi-Leaf Springs - 23,000 lb. Cap *11-leaf. Includes 2,000 lb auxiliary springs for load stabilization.*	$230.00

Prices and content availability as shown are subject to change and should be treated as estimates only. Actual base vehicle, package and option pricing may vary from this estimate because of special local pricing, availability or pricing adjustments not reflected in the dealer's computer system. See salesperson for the most current information.

2021 F-750 Diesel Regular Cab Base (F7D)

Price Level: 120 | Quote ID: Chansnowpl

As Configured Vehicle (cont'd)

Code	Description	MSRP
X6D	6.50 Axle Ratio	N/C
Wheelbase		
158WB	158" Wheelbase/84" CA/49" AF/246" OAL	STD
Frame		
536	Single Channel - Straight 'C' 14.18 SM, 120,000 PSI *1,701,600 RBM. Heat treated alloy steel; 10.125" x 3.580" x 0.312" (257.2mm x 90.9mm x 8.0mm).*	$365.00
532	Frame Extension, Front - Integral 20" In Front of Grille *Includes:* *- Grille, Fixed - Black/Gray*	$490.00
767	Bumper, Front - Swept Back, Painted Steel *Dark shadow gray color.*	$345.00
18D	Special Rating GVWR - Limited to 25,999 lb. GVWR	$120.00
86B	Grille, Fixed - Black/Gray	Included
Exhaust		
91G	Under Cab, Right Side Outlet, Switchback-Style *Single, horizontal muffler, right side, under cab, outside of frame rail with rear discharge.*	STD
Fuel Tanks		
65B	Fuel Tank - LH 50 Gallon Rectangular - Aluminum	STD
12	12 Gal. Single Tank Fuel Fill. Mandatory Charge Applied, Based On Tank Selection	$0.00
Electrical / Alternator / Battery		
STDALT	Extra Heavy Duty Alternator - 12-Volt, 200 Amp Denso SC5	Included

Prices and content availability as shown are subject to change and should be treated as estimates only. Actual base vehicle, package and option pricing may vary from this estimate because of special local pricing, availability or pricing adjustments not reflected in the dealer's computer system. See salesperson for the most current information.

As Configured Vehicle (cont'd)

Code	Description	MSRP
63B	Battery - Two 900 CCA, 1800 Total, Includes Steel Battery Box *12Volt, Motorcraft.*	$60.00
59E	Body Builder Wiring - At End of Frame, Separate - (ILO Standard - Back of Cab Combined) *Includes sealed connectors for 2 ground circuits, with separate left/stop, separate right/stop, back up lamps. Also includes 2 additional pass through wires to cab.*	$135.00
16V	Voltmeter *Available in message center.*	$100.00
Seats		
88G	30/70 Air Ride Driver (External Air Source) & Fixed 2-Passenger Bench - Vinyl	$395.00
Cab Interior		
600A	Preferred Equipment Package 600A *Includes:* *- Wheel Seals, Front - Oil lubricated, SKF ScotSeal PlusXL Seals* *- Wheel Seals, Rear - Oil lubricated, SKF ScotSeal PlusXL Seals* *- Manual Regen Initiation - Driver Interface in Message Center* *- Engine Exhaust Brake* *- Extra Heavy Duty Alternator - 12-Volt, 200 Amp Denso SC5* *- Lights - Roof Marker/Clearance - Amber Lenses, 5 Lights* *- Tow Hooks, Front (2) - Frame-Mounted, Painted Black* *- Four Body Builder Switches - Mounted in Center Instrument Panel With connector access located in engine compartment. Amperages vary by switch: 10, 15, 25, 25.* *- Floor Covering - Black Vinyl* *- Intelligent Oil Life Monitor* *- Steering Column - Tilt / Telescoping* *- Steering Wheel - Black PVC w/Integral Cruise Control Switches, includes Audio Controls*	N/C
90P	Power Equipment Group - (Included in (90A) Appearance Group) *Includes power front side windows, power door locks and door trim panel.*	$470.00
588	Radio: AM/FM Stereo w/2 Speakers, USB input, Clock Display and Bluetooth	STD
Cab Exterior		
54M	Mirrors, Dual - Heated Rectangular, XL2020 - 96" Width *Integral spot mirror, sail type, manual fold, solid black finish.*	$85.00

Prices and content availability as shown are subject to change and should be treated as estimates only. Actual base vehicle, package and option pricing may vary from this estimate because of special local pricing, availability or pricing adjustments not reflected in the dealer's computer system. See salesperson for the most current information.

2021 F-750 Diesel Regular Cab Base (F7D)

Price Level: 120 | Quote ID: Chansnowpl

As Configured Vehicle (cont'd)

Code	Description	MSRP
Miscellaneous		
PAINT	Paint Type - Environmentally Friendly, "3 - Wet System"	STD
Interior Colors		
E_01	Gray	N/C
Primary Colors		
YZ_01	Oxford White	N/C
Upfit Options		
Manuals	Parts and Service Manual	$350.00
Freight	Freight to body co	$250.00
SUBTOTAL		$79,115.00
Destination Charge		$2,095.00
TOTAL		$81,210.00

Prices and content availability as shown are subject to change and should be treated as estimates only. Actual base vehicle, package and option pricing may vary from this estimate because of special local pricing, availability or pricing adjustments not reflected in the dealer's computer system. See salesperson for the most current information.

2021 F-750 Diesel Regular Cab Base (F7D)

Price Level: 120 | Quote ID: Chansnowpl

Warranty

Standard Warranty

Basic			
Distance	Unlimited miles	Months	24 months
Powertrain			
Distance	Unlimited miles	Months	24 months
Corrosion Perforation			
Distance	Unlimited miles	Months	36 months
Roadside Assistance			
Distance	Unlimited miles	Months	24 months
Diesel Engine			
Distance	250,000 miles	Months	60 months
Transmission			
Distance	250,000 miles	Months	60 months
Frame Rail			
Distance	Unlimited miles	Months	60 months

Prices and content availability as shown are subject to change and should be treated as estimates only. Actual base vehicle, package and option pricing may vary from this estimate because of special local pricing, availability or pricing adjustments not reflected in the dealer's computer system. See salesperson for the most current information.

Prepared for: Wayne Robinson
City of Chanute
Prepared by: DAN KELLY
07/20/2020

Merle Kelly Ford | 3501 S Santa Fe Chanute Kansas | 667203240

2021 F-750 Diesel Regular Cab Base (F7D)

Price Level: 120 | Quote ID: ChanDump

Pricing Summary - Single Vehicle

	MSRP
Vehicle Pricing	
Base Vehicle Price	$70,945.00
Options & Colors	$6,135.00
Upfitting	$600.00
Destination Charge	$2,095.00
Subtotal	$79,775.00

Pre-Tax Adjustments

Code	Description	
Gov D	City of Chanute Municipal Discount	-$13,500.00
Galion	10' Galion Dump Bed	$18,561.00

10' Length, 26" tall sides, 32" tallgate with air release, 8 gauge high tensile steel const., Recessed LED ST/T lighting. Double acting under body hoist. Force America hydrualic system to operate hoist, PTO mounted pump. Cable control mounted in cab w/air tailgate valve, Painted Black, Rear Mud Flaps. Back up alarm. Installed.

Total	$84,836.00

Customer Signature

Acceptance Date

Prices and content availability as shown are subject to change and should be treated as estimates only. Actual base vehicle, package and option pricing may vary from this estimate because of special local pricing, availability or pricing adjustments not reflected in the dealer's computer system. See salesperson for the most current information.

Prepared for: Wayne Robinson
City of Chanute
Prepared by: DAN KELLY
07/20/2020

Merle Kelly Ford | 3501 S Santa Fe Chanute Kansas | 667203240

2021 F-750 Diesel Regular Cab Base (F7D)

Price Level: 120 | Quote ID: ChanDump

As Configured Vehicle

Code	Description	MSRP
Base Vehicle		
F7D	Base Vehicle Price (F7D)	$70,945.00
Engines		
99C	6.7L Power Stroke V8 Turbo Diesel - 270 HP @ 2400 RPM Includes Engine Exhaust Brake and manual regen capability. Torque: 700 ft.lbs. @ 1500 rpm. *Governed RPM: 3200. Includes CARB clean idle label - may be removed if un-necessary.*	STD
425	50-State Emissions	N/C
41H	Engine Block Heater, Phillips, 120 Volt/750 Watt	$60.00
98R	Active Regen Control *Allows Driver to Inhibit Automatic Regen until Regen can be performed in a Safe location.*	$205.00
Transmissions		
44G	Ford TorqShift HD 6-Speed Automatic - Double Overdrive, less PTO Provision, less Park Pawl	STD
41A	Transmission Power Take-Off Provision w/LiveDrive Capability and Tow/Haul	$895.00
Front Wheels & Tires		
643	Wheels, Front 22.5x8.25 White Powder Coated Steel, 10-Hole *(285.75MM BC) hub piloted, flanged nut, metric mount. 8.25 DC rims; with steel hubs.*	STD
T2B	Tires, Front Two 11R22.5G Goodyear Fuel Max RSA (497 rev/mile)	STD
Rear Wheels & Tires		
663	Wheels, Rear 22.5x8.25 White Powder Coated Steel, 10-Hole *(285.75MM BC) hub piloted, flanged nut, metric mount, 8.25 DC rims: with steel hubs.*	STD

Prices and content availability as shown are subject to change and should be treated as estimates only. Actual base vehicle, package and option pricing may vary from this estimate because of special local pricing, availability or pricing adjustments not reflected in the dealer's computer system. See salesperson for the most current information.

2021 F-750 Diesel Regular Cab Base (F7D)

Price Level: 120 | Quote ID: ChanDump

As Configured Vehicle (cont'd)

Code	Description	MSRP
R2G	Tires, Rear Four 11R22.5G Goodyear Fuel Max RTD (493 rev/mile)	$140.00
Brakes		
67A	Air Brakes - Straight Truck w/Traction Control *Meritor Q-Plus with ABS, Bendix Anti-Lock Brake System, 4-channel. Includes 15" x 4" front brakes, dual direct reading air pressure gauges, brake lines color coded nylon, Bendix 13.2 CFM capacity air compressor, instrument panel mounted yellow knob parking brake control valve, automatic slack adjusters front and rear, two rear spring parking air brake chambers mounted on front of rear axle, three drain valves and two air tanks (Reference Body Builders Book for location). Rear brake size and components dependent upon axle selection. Uses existing ABS system to minimize wheel slipping during acceleration. Usage determined by the air brake package selected. (Should NEVER be used with Hi-Rail Train Systems).* *Includes:* *- Air Dryer, Bendix AD/IS w/Heater* *Mounted left frame rail (for Hydraulic brake diesel applications that include air suspension or stand alone engine air compressor).*	$2,180.00
62D	Air Dryer, Bendix AD/IS w/Heater *Mounted left frame rail (for Hydraulic brake diesel applications that include air suspension or stand alone engine air compressor).*	Included
Front Axle and Suspension		
43P	12,000 lb. Cap. Non-Driving - Dana E-1202I - I-Beam Type	$525.00
61D	Taper-Leaf Springs, Parabolic - 12,000 lb. Cap *2-leaf, 62" x 3.15". Also includes, standard duty, dual, double acting shock absorbers.*	$305.00
Rear Axle and Suspension		
475	21,000 lb. Single Reduction - Open - Dana / Spicer 21060S *NOTE: When specifying an axle ratio, check performance guidelines for startability and gradeability.*	STD
68R	Multi-Leaf Springs - 23,000 lb. Cap *11-leaf. Includes 2,000 lb auxiliary springs for load stabilization.*	$230.00
X6D	6.50 Axle Ratio	N/C
Wheelbase		
158WB	158" Wheelbase/84" CA/49" AF/246" OAL	STD

Prices and content availability as shown are subject to change and should be treated as estimates only. Actual base vehicle, package and option pricing may vary from this estimate because of special local pricing, availability or pricing adjustments not reflected in the dealer's computer system. See salesperson for the most current information.

2021 F-750 Diesel Regular Cab Base (F7D)

Price Level: 120 | Quote ID: ChanDump

As Configured Vehicle (cont'd)

Code	Description	MSRP
Frame		
536	Single Channel - Straight 'C' 14.18 SM, 120,000 PSI *1,701,600 RBM. Heat treated alloy steel; 10.125" x 3.580" x 0.312" (257.2mm x 90.9mm x 8.0mm).*	$365.00
18D	Special Rating GVWR - Limited to 25,999 lb. GVWR	$120.00
Exhaust		
91G	Under Cab, Right Side Outlet, Switchback-Style *Single, horizontal muffler, right side, under cab, outside of frame rail with rear discharge.*	STD
Fuel Tanks		
65B	Fuel Tank - LH 50 Gallon Rectangular - Aluminum	STD
12	12 Gal. Single Tank Fuel Fill. Mandatory Charge Applied, Based On Tank Selection	$0.00
Electrical / Alternator / Battery		
STDALT	Extra Heavy Duty Alternator - 12-Volt, 200 Amp Denso SC5	Included
63B	Battery - Two 900 CCA, 1800 Total, Includes Steel Battery Box *12Volt, Motorcraft.*	$60.00
16V	Voltmeter *Available in message center.*	$100.00
Seats		
88G	30/70 Air Ride Driver (External Air Source) & Fixed 2-Passenger Bench - Vinyl	$395.00
Cab Interior		
600A	Preferred Equipment Package 600A	N/C

Prices and content availability as shown are subject to change and should be treated as estimates only. Actual base vehicle, package and option pricing may vary from this estimate because of special local pricing, availability or pricing adjustments not reflected in the dealer's computer system. See salesperson for the most current information.

2021 F-750 Diesel Regular Cab Base (F7D)

Price Level: 120 | Quote ID: ChanDump

As Configured Vehicle (cont'd)

Code	Description	MSRP
	Includes: *- Bumper, Front - Black, Full Width* *- Wheel Seals, Front - Oil lubricated, SKF ScotSeal PlusXL Seals* *- Wheel Seals, Rear - Oil lubricated, SKF ScotSeal PlusXL Seals* *- Manual Regen Initiation - Driver Interface in Message Center* *- Engine Exhaust Brake* *- Extra Heavy Duty Alternator - 12-Volt, 200 Amp Denso SC5* *- Painted Grille - Plastic* *- Lights - Roof Marker/Clearance - Amber Lenses, 5 Lights* *- Tow Hooks, Front (2) - Frame-Mounted, Painted Black* *- Four Body Builder Switches - Mounted in Center Instrument Panel* *With connector access located in engine compartment. Amperages vary by switch: 10, 15, 25, 25.* *- Floor Covering - Black Vinyl* *- Intelligent Oil Life Monitor* *- Steering Column - Tilt / Telescoping* *- Steering Wheel - Black PVC w/Integral Cruise Control Switches, includes Audio Controls* *- Body Builder Wiring - At Back of Cab, Combined* *Includes sealed connectors for 2 ground circuits, with combined left/stop, combined right/stop, park lamps, back up lamps. Also includes 2 additional pass through wires to cab.*	
90P	Power Equipment Group - (Included in (90A) Appearance Group) *Includes power front side windows, power door locks and door trim panel.*	$470.00
588	Radio: AM/FM Stereo w/2 Speakers, USB input, Clock Display and Bluetooth	STD
Cab Exterior		
54M	Mirrors, Dual - Heated Rectangular, XL2020 - 96" Width *Integral spot mirror, sail type, manual fold, solid black finish.*	$85.00
Miscellaneous		
PAINT	Paint Type - Environmentally Friendly, "3 - Wet System"	STD
Interior Colors		
E_01	Gray	N/C
Primary Colors		
YZ_01	Oxford White	N/C
Upfit Options		
Manuals	Parts and Service Manual	$350.00
Freight	Freight to body co	$250.00
SUBTOTAL		$77,680.00

Prices and content availability as shown are subject to change and should be treated as estimates only. Actual base vehicle, package and option pricing may vary from this estimate because of special local pricing, availability or pricing adjustments not reflected in the dealer's computer system. See salesperson for the most current information.

2021 F-750 Diesel Regular Cab Base (F7D)

Price Level: 120 | Quote ID: ChanDump

As Configured Vehicle (cont'd)

Code	Description	MSRP
Destination Charge		$2,095.00
TOTAL		$79,775.00

Prices and content availability as shown are subject to change and should be treated as estimates only. Actual base vehicle, package and option pricing may vary from this estimate because of special local pricing, availability or pricing adjustments not reflected in the dealer's computer system. See salesperson for the most current information.

2021 F-750 Diesel Regular Cab Base (F7D)

Price Level: 120 | Quote ID: ChanDump

Warranty

Standard Warranty

Basic			
Distance	Unlimited miles	Months	24 months
Powertrain			
Distance	Unlimited miles	Months	24 months
Corrosion Perforation			
Distance	Unlimited miles	Months	36 months
Roadside Assistance			
Distance	Unlimited miles	Months	24 months
Diesel Engine			
Distance	250,000 miles	Months	60 months
Transmission			
Distance	250,000 miles	Months	60 months
Frame Rail			
Distance	Unlimited miles	Months	60 months

Prices and content availability as shown are subject to change and should be treated as estimates only. Actual base vehicle, package and option pricing may vary from this estimate because of special local pricing, availability or pricing adjustments not reflected in the dealer's computer system. See salesperson for the most current information.

CHANUTE CITY COMMISSION
REGULAR MEETING
MONDAY, AUGUST 10, 2020

AGENDA ITEM – 9H

ITEM: New Business

SUBJECT: Consider Approval for Mill and Overlay

BACKGROUND: During our regular City Commission meeting on July 27, 2020 discussion was made during the City Manager's report for road improvements at 21st and Santa Fe to the northbound lane. Previous road improvements including chip/seal and slurry have failed along this section of highway. City staff has no permanent fix except for major road replacement including milling and overlay.

ANALYSIS: Attached is two quotes from 2019, one from Bettis Asphalt and the other from Heckert Construction Inc.

FINANCIAL CONSIDERATION: Special Highway Fund.

LEGAL CONSIDERATION: N/A

RECOMMENDATION: Discuss moving forward with updated bids and minimizing the work load or phasing of project to minimize costs.

BETTIS ASPHALT

TO: CITY OF CHANUTE - ATTN: WAYNE ROBINSON

PROJECT: S SANTA FE MILL & OVERLAY & CHERRY ST MILL & OVERLAY

DATE: 5/17/2019

LOCATION: VARIOUS STREETS - SEE BID ITEM LIST

PROPOSAL

WE PROPOSE TO PROVIDE LABOR, EQUIPMENT, AND MATERIALS TO COMPLETE THE FOLLOWING IN ACCORDANCE WITH THE SPECIFICATIONS:

DESCRIPTION	QTY.	UNIT	UNIT PRICE	EXTENSION
MOBILIZATION	1.00	LS	$ 17,000.00	$ 17,000.00
S. SANTA FE STREET - 20TH ST. TO 35TH ST.				
1.5" MILLING	29,100.00	SQ. YDS.	$ 1.70	$ 49,470.00
1.5" OVERLAY (KDOT SR-12.5A ASPHALT)	2,400.00	TONS	$ 80.10	$ 192,240.00
CHERRY STREET - PLUMMER ST. TO N. SANTA FE ST.				
1.5" EDGE MILLING CONCRETE	9,135.00	SQ. YDS.	$ 2.35	$ 21,467.25
1.5" OVERLAY (KDOT SR-12.5A ASPHALT)	2,310.00	TONS	$ 80.10	$ 185,031.00
CHERRY STREET - BONDED ASPHALT OPTION				
1.5" OVERLAY (KDOT SR-12.5A ASPHALT)	2,310.00	TONS	$ 95.60	$ 220,836.00
		PROJECT TOTAL		**$ 465,208.25**

NOTES & CONDITIONS:

QUANTITIES SHOWN ARE APPROXIMATE BASED ON 110 LBS / INCH / SQ. YARD OF ASPHALT.
FINAL BILL TO BE BASED ON ACTUAL QUANTITIES AS DETERMINED FROM SCALE TICKETS.
CONCRETE MILLING ON CHERRY ST. WILL BE A 1.5" MILL AT THE GUTTER LINE AND TRANSITIONING TO 0.0" MILL AT 8 FEET.
ASPHALT & CONCRETE MILLINGS TO BE HAULED TO LOCATION PROVIDED BY THE CITY.
OVERLAY ON CHERRY STREET CONCRETE WILL EVENTUALLY RESULT IN REFLECTIVE CRACKING OF THE ASPHALT FROM CONCRETE JOINTS AND CRACKS. THIS CANNOT BE AVOIDED AND IS A NORMAL CONDITION.
PROPOSAL DOES NOT INCLUDE ANY REPAIR OR REPLACEMENT OF UNSUITABLE / UNSTABLE BASE OR SUBGRADE, PATCHING OF EXISTING PAVEMENT, OR UTILITY / MANHOLE / VALVE BOX ADJUSTMENTS.
ASPHALT WILL BE A KDOT SUPERPAVE MIX PLACED USING A SHUTTLE BUGGY AND PAVER.
BETTIS IS NOT RESPONSIBLE FOR DAMAGE TO UTILITIES NOT PROPERLY LOCATED.
PROPOSAL DOES NOT INCLUDE ANY PAVEMENT MARKINGS.
ANY ITEMS NOT SPECIFICALLY INCLUDED IN THIS PROPOSAL ARE EXCLUDED.

SALES TAX IS NOT INCLUDED IN THIS PROPOSAL. IF THE PROJECT IS TAX EXEMPT, A TAX EXEMPTION CERTIFICATE WILL BE REQUIRED BEFORE WORK COMMENCES.

INSURANCE: ***INSURANCE CERTIFICATE, STANDARD COVERAGE AND POLICY LIMITS WILL BE PROVIDED UPON REQUEST***

PAYMENT TERMS: NET 30 DAYS
PROPOSAL ACCEPTANCE: PROPOSAL VOID IF NOT ACCEPTED IN WRITING WITHIN 30 DAYS.

BY: BILL DELICH
Phone: 620-365-2481 Email: bdelich@bettisasphalt.com

ACCEPTANCE OF PROPOSAL

The above prices, terms, conditions, and specifications are satisfactory and are here by accepted. You are hereby authorized to proceed with the work as specified.

By: Date:

Printed Name:

ANY ALTERATION OR DEVIATION FROM THE ABOVE SPECIFIED WORK INVOLING EXTRA COST WILL BE EXECUTED ONLY UPON WRITTEN WORK ORDERS AND WILL BE CHARGED OVER AND ABOVE THE PRICE QUOTED HERE.

HECKERT CONSTRUCTION CO., INC.

An Asphalt Paving Contractor

PROPOSAL

June 13, 2019

City of Chanute
101 S. Lincoln
P.O. Box 907
Chanute, KS 66720

RE: 2019 Street Overlay Program
S. Santa Fe Avenue

We are submitting the following unit prices for the milling and placement of an asphalt pavement on S. Santa Fe Avenue from 21st Street to 35th Street, to an average 1½-inch thicknesses. The millings are to be retained by the City and disposed of at a site determined by the City. The furnished material will be KDOT SM-12.5A, hot mix asphalt pavement. All work shall be as detailed below.

1.) Milling of the existing pavement

2.) Application of a bituminous tack coat.

3.) Placement of a 1½-inch compacted, average thickness hot mix asphalt surface course to the width and thickness as determined by the City.

MILLING MOBILIZATION.....$4,000.00 EACH

MILLING, N. SANTA FE.....$1.27 per SQUARE YARD

ASPHALT PAVEMENT.....$76.56 per TON

The estimated cost of the milling and overlay is approximately $192,535.00, based upon approximate quantities of 25,610 square yards of milling and 2,090 tons of pavement at the above unit prices. Final payment to be made at the above unit prices for the quantities of work measured at completion.

Price quoted does not include sales tax. City of Chanute to provide tax exempt certificate.

Respectfully submitted:
HECKERT CONSTRUCTION CO., INC.

Peter J. Kemmeter

Peter J. Kemmeter

Accepted:
CITY OF CHANUTE

This proposal is void after 30 days.

746 E 520TH AVE.• PITTSBURG, KS 66762
PHONE: 620-231-6090 • FAX: 620-231-1733

HECKERT CONSTRUCTION CO., INC.

An Asphalt Paving Contractor

PROPOSAL

June 13, 2019

City of Chanute
101 S. Lincoln
P.O. Box 907
Chanute, KS 66720

RE: 2019 Street Overlay Program
W. Cherry Street

We are submitting the following unit prices for the milling and placement of an asphalt pavement on W. Cherry Street from N. Plummer Street to N. Santa Fe Avenue, to an average 1½-inch thicknesses. The millings are to be retained by the City and disposed of at a site determined by the City. The furnished material will be KDOT SM-12.5A, hot mix asphalt pavement. All work shall be as detailed below.

1.) Milling of the existing pavement

2.) Application of a bituminous tack coat.

3.) Placement of a 1½-inch compacted, average thickness hot mix asphalt surface course to the width and thickness as determined by the City.

MILLING MOBILIZATION.....$4,000.00 EACH

MILLING, N. SANTA FE.....$4.18 per SQUARE YARD

ASPHALT PAVEMENT.....$76.56 per TON

The estimated cost of the milling and overlay is approximately $279,962.00, based upon approximate quantities of 26,865 square yards of milling and 2,190 tons of pavement at the above unit prices. Final payment to be made at the above unit prices for the quantities of work measured at completion.

Price quoted does not include sales tax. City of Chanute to provide tax exempt certificate.

Respectfully submitted:
HECKERT CONSTRUCTION CO., INC.

Peter J. Kemmeter

Accepted:
CITY OF CHANUTE

_____

This proposal is void after 30 days.

746 E 520TH AVE. • PITTSBURG, KS 66762
PHONE: 620-231-6090 • FAX: 620-231-1733

HECKERT CONSTRUCTION CO., INC.
An Asphalt Paving Contractor

June 13, 2019

Mr. Wayne Robinson, Director of Streets Department
City of Chanute
101 S. Lincoln
P.O. Box 907
Chanute, KS 66720

RE: Washington Street Reconstruction

Dear Mr. Robinson,

We have inspected the section of Washington Street from the Watco Railroad to 14th Street at your request and have arrived at an approximate cost of $165,000.00 to reconstruct the street back to its present width and alignment.

The estimated cost is based upon the removal of the existing asphalt pavement, excavating the existing road to a depth of 2-feet, placement of a drainage pipe from the existing catch basin to the west ditch, placement of an average 20-inch crushed rock base course, and placement of a 4-inch asphalt pavement. Due to the legal and financial problems involved with working within the Railroad right-of-way, the work would begin north of the Railroads right-of-way.

If you have any questions, please feel free to contact the writer.

Sincerely,
HECKERT CONSTRUCTION CO., INC.

Peter J. Kemmeter

Peter J. Kemmeter

746 E 520TH AVE.• PITTSBURG, KS 66762
PHONE: 620-231-6090 • FAX: 620-231-1733

CHANUTE CITY COMMISSION
REGULAR MEETING
MONDAY, AUGUST 10, 2020

AGENDA ITEM – 9I

ITEM: New Business

SUBJECT: Resolution Declaring Property at 722 South Grant in violation of Chanute Municipal Code 10.30.030.

BACKGROUND: On January 29, 2020 the property located at 722 South Grant was found by the City Inspector to be in violation of Chanute Municipal Code Section 10.30.030. On January 29, 2020 a nuisance notice was sent, via certified mail to owners, Campbell Family Trust, notifying the owners that they were in violation of said code, due to allowing inoperable vehicle(s) to remain on said property. (See attached pictures of property). The owners were given until February 29, 2020 to correct the problem. If they felt this violation was sent in error, they could request a hearing with the City Manager. Failure on their part to take any action would result in court action and/or abatement by the City.

ANALYSIS: Adopting the attached resolution would be the final step in this process. Per the Resolution, the owners would have until August 20, 2020 to comply with the City Code. If they fail to do so, the City would then have a contractor remove the inoperable vehicle(s), and all associated costs incurred by the City would be charged against the lot or subject real property as provided in Chanute Code Section 10.30.130. A copy of Chanute Code Section 10.30.130 is attached for reference.

FINANCIAL CONSIDERATION: Sufficient funds are available for this work.

LEGAL CONSIDERATION: Resolution has been prepared by City Attorney.

RECOMMENDATION: A hearing with the City Manager has not been requested. Staff therefore recommends approval of the Resolution declaring the property located at 722 South Grant to be in violation of Chanute Municipal Code Section 10.30.030 with authorization for abatement of certain nuisances.

Chanute
a TRADITION of INNOVATION

Sent Copy to tenant also - Returned Unclaimed 2/24/2

2/3 - Donna Allen (tenant) called wanting to know what letter was all about. Mail delivery put stickers on door but didit knock. She says she is disabled + cannot get to Post Office. I told her she has until 2/29/20 or first of March to correct problems.

Progress - RC - 3/27/20
she called 3/2 - One Vehicle gone - back yard cleaned - Still working on front 2 vehicles but they are in driveway

1/29/2020

CAMPBELL FAMILY TRUST
2171 MILDRED
CONCORD, CA 94520

NUISANCE NOTICE – **722 S GRANT AVE - CHANUTE, KS 66720**

To Whom It May Concern:

Investigation of a nuisance complaint at the above referenced address has revealed the following violation(s): ALL INOPERABLE VEHICLE(S), DILAPIDATED TRAMPOLINE and FURNITURE MUST BE REMOVED FROM THE ABOVE REFERENCED PROPERTY.

(Resolution)
car only

The above violation(s) must be corrected by: 2/29/2020

Failure to make the necessary corrections will result in your appearance in the Chanute Municipal Court to answer the violation(s) charged, or abatement of these conditions by the City. Note: failure to make the corrections within the time allowed may constitute a separate offense for each day the violation(s) exist beyond the time allowed for correction. If you feel this notice has been sent in error you may before the aforementioned date request a hearing before the City Manager.

The City of Chanute is primarily interested in causing these violation(s) to be corrected and not repeated. When you make the necessary corrections, please contact us. We will be checking back to make sure the corrections have been made.

If you have any questions about the above named violation(s), contact me at (620) 431-5233.

Sincerely,

Janet Rollow

Janet Rollow
Code Enforcement Officer

REMOVE ALL INOPERABLE VEHICLES AT
722 SOUTH GRANT

OK

REMOVE DILAPIDATED TRAMPOLINE AT
722 SOUTH GRANT

OK

REMOVE FURNITURE AT 722 SOUTH GRANT

OK

REMOVE ALL INOPERABLE VEHICLES AT
722 SOUTH GRANT

Car Only

RESOLUTION NO. _____

A RESOLUTION DECLARING THAT THE PROPERTY LOCATED AT 722 SOUTH GRANT IS IN VIOLATION OF CHANUTE MUNICIPAL CODE, SECTION 10.30.030, AND AUTHORIZING ABATEMENT OF CERTAIN NUISANCES CONTAINED THEREON.

WHEREAS, on January 29, 2020, the property located at 722 S. Grant was found to be in violation of Chanute Municipal Code Section 10.30.030 and notice was served on the owners, Campbell Family Trust, notifying said owners that they were in violation of Chanute Municipal Code, Section 10.30.030, due to allowing inoperable vehicle(s) to remain on said property.

WHEREAS, after service of the Notice, no request for an administrative hearing was received by the city;

WHEREAS, the City Manager is now requesting a Resolution by the City Commission to abate the aforementioned nuisances as provided by Chanute Municipal Code Section 10.30.100.

NOW, THEREFORE, BE IT RESOLVED BY THE GOVERNING BODY OF THE CITY OF CHANUTE, KANSAS:

That on January 29, 2020, the property located at 722 S. Grant was found to be in violation of Chanute Municipal Code, Section 10.30.030, and there has been no substantial attempt by the owners, Campbell Family Trust, to abate said nuisances. Proper notice of this violation was provided to the owners and no administrative hearing was requested. Accordingly, the City of Chanute and/or its contractors is authorized and ordered to abate the nuisances from the aforementioned property on or after August 20, 2020 after passage of this Resolution, pursuant to Chanute Municipal Code, Section 10.30.100.

BE IT FURTHER RESOLVED, that any costs incurred by the City of Chanute in abating the nuisances shall be charged against the lot or subject real property as provided in Chanute Municipal Code, Section 10.30.130.

BE IT FURTHER RESOLVED, that a copy of this Resolution is to be served in any manner allowed by the Ordinance.

Adopted this 10th day of August, 2020.

_____
Jacob LaRue, Mayor

ATTEST:

_____
Tina L. Bailey, City Clerk

APPROVED AS TO FORM:

_____
David S. Brake, City Attorney

CHANUTE CITY COMMISSION
REGULAR MEETING
MONDAY, AUGUST 10, 2020

AGENDA ITEM – 9J

ITEM: New Business

SUBJECT: Resolution Declaring Property at 317 South Wilson in violation of Chanute Municipal Code 8.20.010 (G) & 10.30.030.

BACKGROUND: On February 24, 2020, the property located at 317 South Wilson was found by the City Inspector to be in violation of Chanute Municipal Code Section 8.20.010 (G) & 10.30.030. On February 24, 2020, a nuisance notice was sent, via certified mail to owners, Dorothy Booe c/o Don Booe, notifying the owners that they were in violation of said code, due to allowing inoperable vehicle(s), and an undue and excessive accumulation of trash, junk refuse and appliances to remain on said property. (See attached pictures of property). The owners were given until March 24, 2020 to correct the problem. If they felt this violation was sent in error, they could request a hearing with the City Manager. Failure on their part to take any action would result in court action and/or abatement by the City.

ANALYSIS: Adopting the attached resolution would be the final step in this process. Per the Resolution, the owners would have until August 20, 2020 to comply with the City Code. If they fail to do so, the City would then have a contractor clean up the area and remove the inoperable vehicle(s), trash, junk, refuse and appliances. All associated costs incurred by the City would be charged against the lot or subject real property as provided in Chanute Code Section 8.20.100 & 10.30.030. A copy of Chanute Code Section 8.20.100 & 10.30.030 is attached for reference.

FINANCIAL CONSIDERATION: Sufficient funds are available for this work.

LEGAL CONSIDERATION: Resolution has been prepared by City Attorney.

RECOMMENDATION: A hearing with the City Manager has not been requested. Staff therefore recommends approval of the Resolution declaring the property located at 317 South Wilson to be in violation of Chanute Municipal Code Section 8.20.010 (G) & 10.30.030 with authorization for abatement of certain nuisances.

Chanute
a TRADITION of INNOVATION

Received 3/13/20
Resolution ✓
progress

2/24/2020

DOROTHY BOOE C/O DON BOOE
317 S WILSON
CHANUTE, KS 66720

NUISANCE NOTICE – **317 S WILSON AVE - CHANUTE, KS 66720**

To Whom It May Concern:

Investigation of a nuisance complaint at the above referenced address has revealed the following violation(s): ALL INOPERABLE VEHICLE(S), TRASH, JUNK, REFUSE and APPLIANCES MUST BE REMOVED FROM THE ABOVE REFERENCED PROPERTY.

The above violation(s) must be corrected by: 3/24/2020

Failure to make the necessary corrections will result in your appearance in the Chanute Municipal Court to answer the violation(s) charged, or abatement of these conditions by the City. Note: failure to make the corrections within the time allowed may constitute a separate offense for each day the violation(s) exist beyond the time allowed for correction. If you feel this notice has been sent in error you may before the aforementioned date request a hearing before the City Manager.

The City of Chanute is primarily interested in causing these violation(s) to be corrected and not repeated. When you make the necessary corrections, please contact us. We will be checking back to make sure the corrections have been made.

If you have any questions about the above named violation(s), contact me at (620) 431-5233.

Sincerely,

Janet Rollow

Janet Rollow
Code Enforcement Officer

REMOVE ALL TRASH, JUNK, REFUSE & APPLIANCES AT
317 SOUTH WILSON

REMOVE ALL TRASH, JUNK & REFUSE AT
317 SOUTH WILSON

REMOVE INOPERABLE VEHICLE AT 317 SOUTH WILSON
NO
KANSAS
KS 2018
MAR
405BWS
3665905
405 BWS
12M
REGULAR

REMOVE INOPERABLE VEHICLE AT 317 SOUTH WILSON
405 BWS

RESOLUTION NO. _____

A RESOLUTION DECLARING THAT THE PROPERTY LOCATED AT 317 SOUTH WILSON IS IN VIOLATION OF CHANUTE MUNICIPAL CODE, SECTIONS 8.20.010 (G) AND 10.30.030, AND AUTHORIZING ABATEMENT OF CERTAIN NUISANCES CONTAINED THEREON.

WHEREAS, on February 24, 2020, the property located at 317 S. Wilson was found to be in violation of Chanute Municipal Code Sections 8.20.010 (G) and 10.30.030 and notice was sent by certified mail to the owners, Dorothy Booe c/o Don Booe, notifying said owners that they were in violation of Chanute Municipal Code, Sections 8.20.010 (G) and 10.30.030, due to allowing inoperable vehicle(s), and an undue and excessive accumulation of trash, junk, refuse and appliances to remain on said property.

WHEREAS, after service of the Notice, no request for an administrative hearing was received by the city;

WHEREAS, the City Manager is now requesting a Resolution by the City Commission to abate the aforementioned nuisances as provided by Chanute Municipal Code Sections 8.20.080 and 10.30.100.

NOW, THEREFORE, BE IT RESOLVED BY THE GOVERNING BODY OF THE CITY OF CHANUTE, KANSAS:

That on February 24, 2020, the property located at 317 S. Wilson was found to be in violation of Chanute Municipal Code, Sections 8.20.010 (G) and 10.30.030, and there has been no substantial attempt by the owners, Dorothy Booe c/o Don Booe, to abate said nuisances. Proper notice of this violation was provided to the owners and no administrative hearing was requested. Accordingly, the City of Chanute and/or its contractors is authorized and ordered to abate the nuisances from the aforementioned property on or after August 20, 2020, after passage of this Resolution, pursuant to Chanute Municipal Code, Sections 8.20.080 and 10.30.100.

BE IT FURTHER RESOLVED, that any costs incurred by the City of Chanute in abating the nuisances shall be charged against the lot or subject real property as provided in Chanute Municipal Code, Sections 8.20.100 and 10.30.130.

BE IT FURTHER RESOLVED, that a copy of this Resolution is to be served in any manner allowed by the Ordinance.

Adopted this 10th day of August, 2020.

_____
Jacob LaRue, Mayor

ATTEST:

_____
Tina L. Bailey, City Clerk

APPROVED AS TO FORM:

_____
David S. Brake, City Attorney

CHANUTE CITY COMMISSION
REGULAR MEETING
MONDAY, AUGUST 10, 2020

AGENDA ITEM – 9K

ITEM: New Business

SUBJECT: Resolution Declaring Property at 617 North Grant in violation of Chanute Municipal Code 8.20.010 (E), (G) & 10.30.030

BACKGROUND: On June 18, 2020, the property located at 617 North Grant was found by the City Inspector to be in violation of Chanute Municipal Code Section 8.20.010 (E), (G) & 10.30.030. On June 18, 2020 a nuisance notice was sent, via certified mail to owner, Lloyd Coble, notifying the owner that he was in violation of said code, due to allowing unsightly vegetation, an undue excessive accumulation of trash, junk, refuse, appliances, tires, worn out machines, old lumber/construction material and inoperable vehicle(s) to remain on said property. (See attached pictures of property). The owner was given until July 18, 2020 to correct the problem. If he felt this violation was sent in error, he could request a hearing with the City Manager. Failure on his part to take any action would result in court action and/or abatement by the City.

ANALYSIS: Adopting the attached resolution would be the final step in this process. Per the Resolution, the owner would have until August 20, 2020 to comply with the City Code. If he fails to do so, the City would then have a contractor clean up the area and remove the unsightly vegetation, trash, junk, refuse, appliances, tires, worn out machines, old lumber/construction material and inoperable vehicle(s). All associated costs incurred by the City would be charged against the lot or subject real property as provided in Chanute Code Section 8.20.100 & 10.30.130. A copy of Chanute Code Section 8.20.100 & 10.30.130 is attached for reference.

FINANCIAL CONSIDERATION: Sufficient funds are available for this work.

LEGAL CONSIDERATION: Resolution has been prepared by City Attorney.

RECOMMENDATION: A hearing with the City Manager has not been requested. Staff therefore recommends approval of the Resolution declaring the property located at 617 North Grant to be in violation of Chanute Municipal Code Section 8.20.010 (E), (G) & 10.30.030 with authorization for abatement of certain nuisances.

Chanute
a TRADITION of INNOVATION

Received 6/29/20

7/13 - Lloyd called + said he is working on it + needs an extension -

RC 8/3/20

Some Progress but still in Violation Resolution

6/18/2020

LLOYD COBLE
1420 S EVERGREEN
CHANUTE, KS 66720

212-5012

NUISANCE NOTICE – **617 N GRANT AVE - CHANUTE, KS 66720**

To Whom It May Concern:

Investigation of a nuisance complaint at the above referenced address has revealed the following violation(s): ALL TRASH, JUNK, APPLIANCES, TIRES, REFUSE, WORN OUT MACHINES, OLD LUMBER/CONSTRUCTION MATERIAL, UNSIGHTLY VEGETATION & INOPERABLE VEHICLE MUST BE REMOVED FROM THE ABOVE REFERENCED PROPERTY.

The above violation(s) must be corrected by: 7/18/2020

Failure to make the necessary corrections will result in your appearance in the Chanute Municipal Court to answer the violation(s) charged, or abatement of these conditions by the City. Note: failure to make the corrections within the time allowed may constitute a separate offense for each day the violation(s) exist beyond the time allowed for correction. If you feel this notice has been sent in error you may before the aforementioned date request a hearing before the City Manager.

The City of Chanute is primarily interested in causing these violation(s) to be corrected and not repeated. When you make the necessary corrections, please contact us. We will be checking back to make sure the corrections have been made.

If you have any questions about the above named violation(s), contact me at (620) 431-5233.

Sincerely,

Janet Rollow

Janet Rollow
Code Enforcement Officer

REMOVE ALL FURNITURE, TRASH, JUNK & REFUSE AT
617 NORTH GRANT

ok

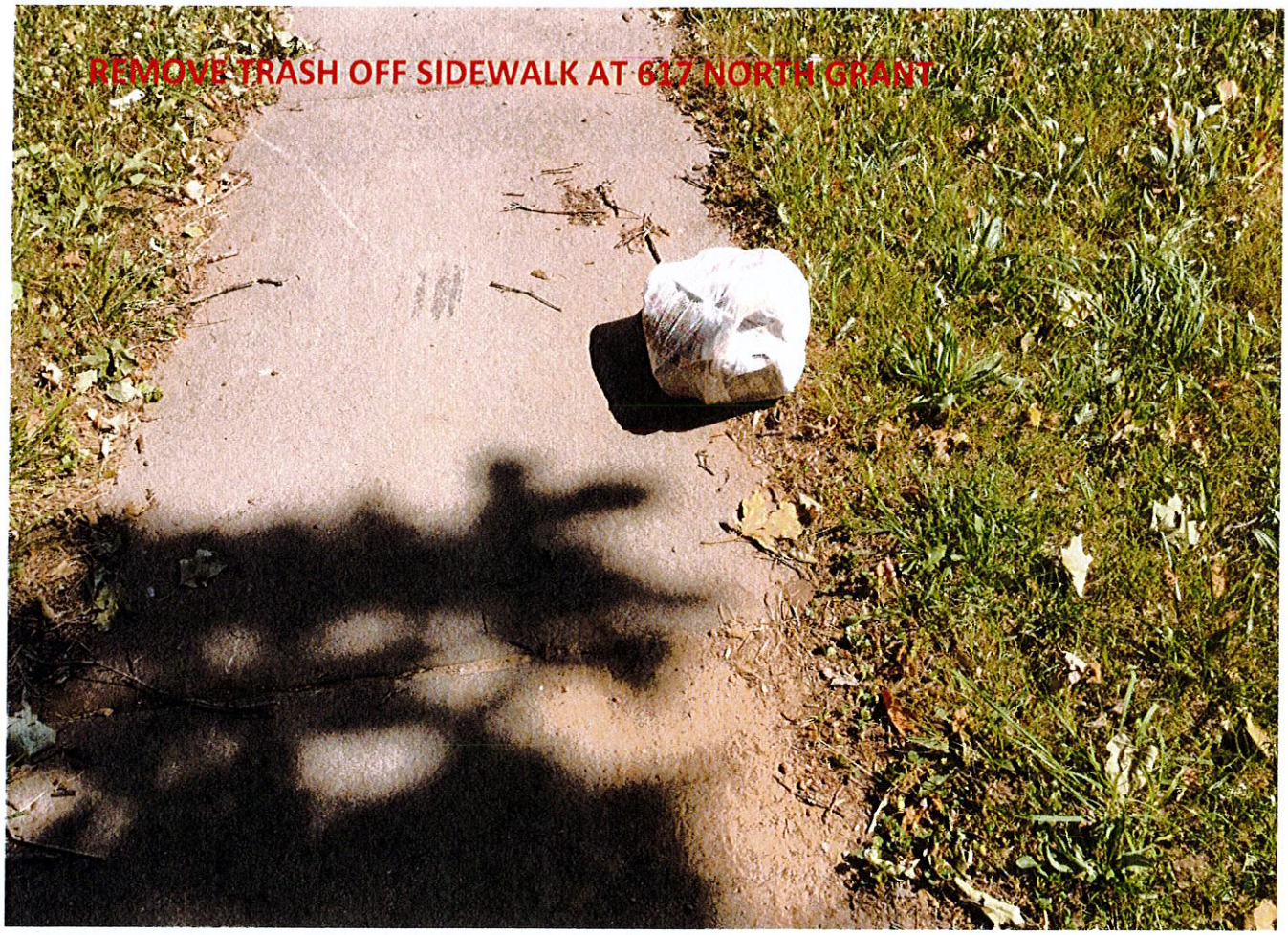
REMOVE TRASH OFF SIDEWALK AT 617 NORTH GRANT

ok

REMOVE ALL SCATTERED TRASH, JUNK, REFUSE, TIRES,
WORN OUT MACHINES, OLD LUMBER & APPLIANCES AT
617 NORTH GRANT

REMOVE ALL TRASH, JUNK & REFUSE AT
617 NORTH GRANT

REMOVE ALL UNSIGHTLY VEGETATION & INOPERABLE
VEHICLE AT 617 NORTH GRANT

RESOLUTION NO. _____

A RESOLUTION DECLARING THAT THE PROPERTY LOCATED AT 617 NORTH GRANT IS IN VIOLATION OF CHANUTE MUNICIPAL CODE, SECTIONS 8.20.010 (E), (G) AND 10.30.030, AND AUTHORIZING ABATEMENT OF CERTAIN NUISANCES CONTAINED THEREON.

WHEREAS, on June 18, 2020, the property located at 617 N. Grant was found to be in violation of Chanute Municipal Code Sections 8.20.010 (E), (G) and 10.30.030 and notice was sent by certified mail to the owner, Lloyd Coble, notifying said owner that he was in violation of Chanute Municipal Code, Sections 8.20.010 (E), (G) and 10.30.030, due to allowing unsightly vegetation, an undue excessive accumulation of trash, junk, refuse, appliances, tires, worn out machines, old lumber/construction material and inoperable vehicle(s) to remain on said property.

WHEREAS, after service of the Notice, no request for an administrative hearing was received by the city;

WHEREAS, the City Manager is now requesting a Resolution by the City Commission to abate the aforementioned nuisances as provided by Chanute Municipal Code Sections 8.20.080 and 10.30.100.

NOW, THEREFORE, BE IT RESOLVED BY THE GOVERNING BODY OF THE CITY OF CHANUTE, KANSAS:

That on June 18, 2020, the property located at 617 N. Grant was found to be in violation of Chanute Municipal Code, Sections 8.20.010 (E), (G) and 10.30.030, and there has been no substantial attempt by the owner, Lloyd Coble, to abate said nuisances. Proper notice of this violation was provided to the owner and no administrative hearing was requested. Accordingly, the City of Chanute and/or its contractors is authorized and ordered to abate the nuisances from the aforementioned property on or after August 20, 2020, after passage of this Resolution, pursuant to Chanute Municipal Code, Sections 8.20.080 and 10.30.100.

BE IT FURTHER RESOLVED, that any costs incurred by the City of Chanute in abating the nuisances shall be charged against the lot or subject real property as provided in Chanute Municipal Code, Sections 8.20.100 and 10.30.130.

BE IT FURTHER RESOLVED, that a copy of this Resolution is to be served in any manner allowed by the Ordinance.

Adopted this 10th day of August, 2020.

_____
Jacob LaRue, Mayor

ATTEST:

_____
Tina L. Bailey, City Clerk

APPROVED AS TO FORM:

_____
David S. Brake, City Attorney

CHANUTE CITY COMMISSION
REGULAR MEETING
MONDAY, AUGUST 10, 2020

AGENDA ITEM – 9L

ITEM: New Business

SUBJECT: Resolution Declaring Property at 517 North Santa Fe in violation of Chanute Municipal Code 8.20.010 (E) & (G).

BACKGROUND: On June 18, 2020, the property located at 517 North Santa Fe was found by the City Inspector to be in violation of Chanute Municipal Code Section 8.20.010 (E) & (G). On June 18, 2020 a nuisance notice was sent, via certified mail to owner, John Wesley Buckner IV, notifying the owner that he was in violation of said code, due to allowing unsightly vegetation, and undue excessive accumulation of trash, junk and refuse to remain on said property. (See attached pictures of property). The owner was given until June 28, 2020 to correct the problem. If he felt this violation was sent in error, he could request a hearing with the City Manager. Failure on his part to take any action would result in court action and/or abatement by the City.

ANALYSIS: Adopting the attached resolution would be the final step in this process. Per the Resolution, the owner would have until August 20, 2020 to comply with the City Code. If he fails to do so, the City would then have a contractor clean up the area and remove the unsightly vegetation, trash, junk and refuse. All associated costs incurred by the City would be charged against the lot or subject real property as provided in Chanute Code Section 8.20.100. A copy of Chanute Code Section 8.20.100 is attached for reference.

FINANCIAL CONSIDERATION: Sufficient funds are available for this work.

LEGAL CONSIDERATION: Resolution has been prepared by City Attorney.

RECOMMENDATION: A hearing with the City Manager has not been requested. Staff therefore recommends approval of the Resolution declaring the property located at 517 North Santa Fe to be in violation of Chanute Municipal Code Section 8.20.010 (E) & (G) with authorization for abatement of certain nuisances.

Chanute
a TRADITION of INNOVATION

Returned Unclaimed
7/3/20
RC 7/7/20
Resolution

6/18/2020

JOHN WESLEY BUCKNER IV
517 N SANTA FE
CHANUTE, KS 66720

NUISANCE NOTICE – **517 N SANTA FE AVE - CHANUTE, KS 66720**

To Whom It May Concern:

Investigation of a nuisance complaint at the above referenced address has revealed the following violation(s): ALL TRASH, JUNK, REFUSE, AND UNSIGHTLY VEGETATION MUST BE REMOVED FROM THE ABOVE REFERENCED PROPERTY.

The above violation(s) must be corrected by: 6/28/2020

Failure to make the necessary corrections will result in your appearance in the Chanute Municipal Court to answer the violation(s) charged, or abatement of these conditions by the City. Note: failure to make the corrections within the time allowed may constitute a separate offense for each day the violation(s) exist beyond the time allowed for correction. If you feel this notice has been sent in error you may before the aforementioned date request a hearing before the City Manager.

The City of Chanute is primarily interested in causing these violation(s) to be corrected and not repeated. When you make the necessary corrections, please contact us. We will be checking back to make sure the corrections have been made.

If you have any questions about the above named violation(s), contact me at (620) 431-5233.

Sincerely,

Janet Rollow

Janet Rollow
Code Enforcement Officer

REMOVE ALL UNSIGHTLY VEGETATION AT
517 NORTH SANTA FE

REMOVE ALL UNSIGHTLY VEGETATION AT
517 NORTH SANTA FE

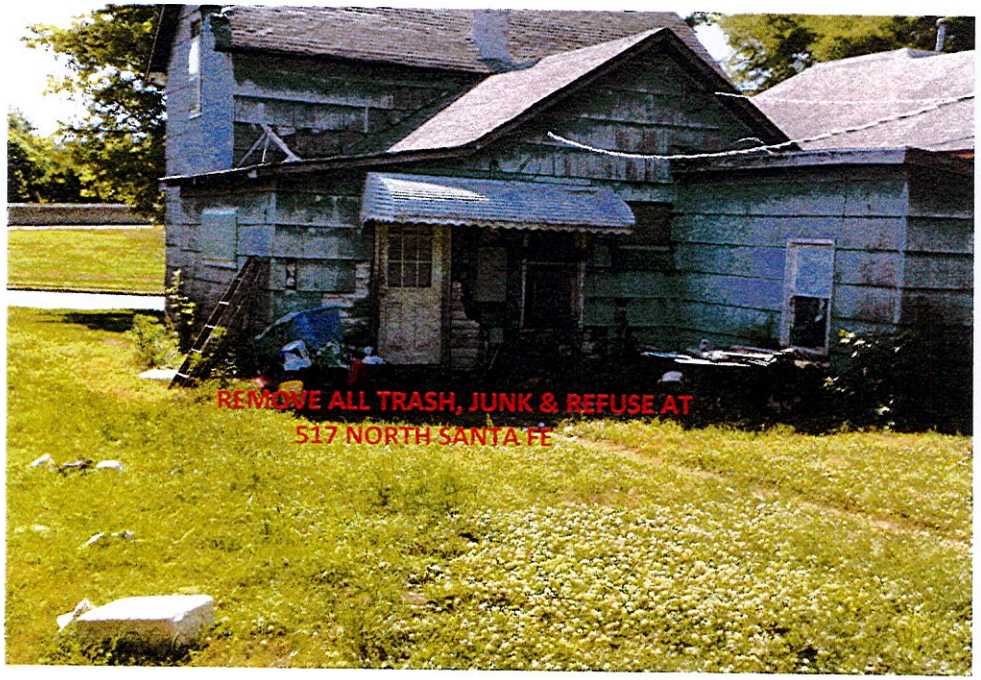
REMOVE ALL TRASH, JUNK & REFUSE AT
517 NORTH SANTA FE

REMOVE ALL UNSIGHTLY VEGETATION AT
517 NORTH SANTA FE

REMOVE ALL UNSIGHTLY VEGETAION, TRAH, JUNK &
REFUSE AT 517 NORTH SANTA FE

RESOLUTION NO. _____

A RESOLUTION DECLARING THAT THE PROPERTY LOCATED AT 517 NORTH SANTA FE IS IN VIOLATION OF CHANUTE MUNICIPAL CODE SECTION 8.20.010 (E) & (G) AND AUTHORIZING ABATEMENT OF CERTAIN NUISANCES CONTAINED THEREON.

WHEREAS, on June 18, 2020, the property located at 517 N. Santa Fe was found to be in violation of Chanute Municipal Code Section 8.20.010 (E) & (G) and notice was sent by certified mail to the owner, John Wesley Buckner IV, notifying said owner that he was in violation of Chanute Municipal Code, Section 8.20.010 (E) & (G), due to allowing unsightly vegetation, and an undue excessive accumulation of trash, junk and refuse to remain on said property.

WHEREAS, after service of the Notice, no request for an administrative hearing was received by the city;

WHEREAS, the City Manager is now requesting a Resolution by the City Commission to abate the aforementioned nuisances as provided by Chanute Municipal Code, Section 8.20.080.

NOW, THEREFORE, BE IT RESOLVED BY THE GOVERNING BODY OF THE CITY OF CHANUTE, KANSAS:

That on June 18, 2020, the property located at 517 N. Santa Fe was found to be in violation of Chanute Municipal Code, Section 8.20.010 (E) & (G), and there has been no substantial attempt by the owner, John Wesley Buckner IV, to abate said nuisances. Proper notice of this violation was provided to the owner and no administrative hearing was requested. Accordingly, the City of Chanute and/or its contractors is authorized and ordered to abate the nuisances from the aforementioned property on or after August 20, 2020, after passage of this Resolution, pursuant to Chanute Municipal Code, Section 8.20.080.

BE IT FURTHER RESOLVED, that any costs incurred by the City of Chanute in abating the nuisances shall be charged against the lot or subject real property as provided in Chanute Municipal Code, Section 8.20.100.

BE IT FURTHER RESOLVED, that a copy of this Resolution is to be served in any manner allowed by the Ordinance.

Adopted this 10th day of August, 2020.

_____
Jacob LaRue, Mayor

ATTEST:

_____
Tina L. Bailey, City Clerk

APPROVED AS TO FORM:

_____
David S. Brake, City Attorney

CHANUTE CITY COMMISSION
REGULAR MEETING
MONDAY, AUGUST 10, 2020

AGENDA ITEM – 9M

ITEM: New Business

SUBJECT: Resolution Declaring Property at 301 South Ashby in violation of Chanute Municipal Code 8.20.010 (E) & (G).

BACKGROUND: On June 23, 2020, the property located at 301 South Ashby was found by the City Inspector to be in violation of Chanute Municipal Code Section 8.20.010 (E) & (G). On June 23, 2020 a nuisance notice was sent, via certified mail to owner, Robert D Smith, notifying the owner that he was in violation of said code, due to allowing unsightly vegetation, and undue excessive accumulation of trash, junk, furniture, lumber/boards and refuse to remain on said property. (See attached pictures of property). The owner was given until July 3, 2020 to correct the problem. If he felt this violation was sent in error, he could request a hearing with the City Manager. Failure on his part to take any action would result in court action and/or abatement by the City.

ANALYSIS: Adopting the attached resolution would be the final step in this process. Per the Resolution, the owner would have until August 20, 2020 to comply with the City Code. If he fails to do so, the City would then have a contractor clean up the area and remove the unsightly vegetation, trash, junk, furniture, lumber/boards and refuse. All associated costs incurred by the City would be charged against the lot or subject real property as provided in Chanute Code Section 8.20.100. A copy of Chanute Code Section 8.20.100 is attached for reference.

FINANCIAL CONSIDERATION: Sufficient funds are available for this work.

LEGAL CONSIDERATION: Resolution has been prepared by City Attorney.

RECOMMENDATION: A hearing with the City Manager has not been requested. Staff therefore recommends approval of the Resolution declaring the property located at 301 South Ashby to be in violation of Chanute Municipal Code Section 8.20.010 (E) & (G) with authorization for abatement of certain nuisances.

Received 6/26/20
Minor - Progress
Resolution ✓

Chanute
a TRADITION of INNOVATION

6/23/2020

ROBERT D SMITH
18 E 9TH
CHANUTE, KS 66720

NUISANCE NOTICE – **301 S ASHBY AVE - CHANUTE, KS 66720**

To Whom It May Concern:

Investigation of a nuisance complaint at the above referenced address has revealed the following violation(s): ALL TRASH, JUNK, REFUSE, UNSIGHTLY VEGETATION, FURNITURE, LUMBER/BOARDS, DEBRIS ON SIDEWALK MUST BE REMOVED; TREE NEEDS TRIMMED 8 FT ABOVE SURFACE FROM THE ABOVE REFERENCED PROPERTY.

The above violation(s) must be corrected by: 7/3/2020

Failure to make the necessary corrections will result in your appearance in the Chanute Municipal Court to answer the violation(s) charged, or abatement of these conditions by the City. Note: failure to make the corrections within the time allowed may constitute a separate offense for each day the violation(s) exist beyond the time allowed for correction. If you feel this notice has been sent in error you may before the aforementioned date request a hearing before the City Manager.

The City of Chanute is primarily interested in causing these violation(s) to be corrected and not repeated. When you make the necessary corrections, please contact us. We will be checking back to make sure the corrections have been made.

If you have any questions about the above named violation(s), contact me at (620) 431-5233.

Sincerely,

Janet Rollow

Janet Rollow
Code Enforcement Officer

REMOVE ALL FURNITURE, TRASH, JUNK, REFUSE &
UNSIGHTLY VEGETATION AT 301 SOUTH ASHBY

REMOVE ALL UNSIGHTLY VEGETATION AT
301 SOUTH ASHBY

REMOVE ALL UNSIGHTLY VEGETATION AT
301 SOUTH ASHBY

REMOVE ALL FURNITURE & UNSIGHTLY VEGETATION AT
301 SOUTH ASHBY

REMOVE ALL TRASH, JUNK, REFUSE, FURNITURE &
UNSIGHTLY VEGETATION AT 301 SOUTH ASHBY

REMOVE ALL UNSIGHTLY VEGETATION AT
301 SOUTH ASHBY

REMOVE LUMBER/BOARDS AT 301 SOUTH ASHBY

TRIM TREE 8 FEET ABOVE SURFACE; REMOVE DEBRIS
FROM SIDEWALK AT 801 SOUTH ASHBY

RESOLUTION NO. _____

A RESOLUTION DECLARING THAT THE PROPERTY LOCATED AT 301 SOUTH ASHBY IS IN VIOLATION OF CHANUTE MUNICIPAL CODE SECTION 8.20.010 (E) & (G) AND AUTHORIZING ABATEMENT OF CERTAIN NUISANCES CONTAINED THEREON.

WHEREAS, on June 23, 2020, the property located at 301 S. Ashby was found to be in violation of Chanute Municipal Code Section 8.20.010 (E) & (G) and notice was sent by certified mail to the owner, Robert D. Smith, notifying said owner that he was in violation of Chanute Municipal Code, Section 8.20.010 (E) & (G), due to allowing unsightly vegetation, and an undue excessive accumulation of trash, junk, furniture, lumber/boards and refuse to remain on said property.

WHEREAS, after service of the Notice, no request for an administrative hearing was received by the city;

WHEREAS, the City Manager is now requesting a Resolution by the City Commission to abate the aforementioned nuisances as provided by Chanute Municipal Code, Section 8.20.080.

NOW, THEREFORE, BE IT RESOLVED BY THE GOVERNING BODY OF THE CITY OF CHANUTE, KANSAS:

That on June 23, 2020, the property located at 301 S. Ashby was found to be in violation of Chanute Municipal Code, Section 8.20.010 (E) & (G), and there has been no substantial attempt by the owner, Robert D. Smith, to abate said nuisances. Proper notice of this violation was provided to the owner and no administrative hearing was requested. Accordingly, the City of Chanute and/or its contractors is authorized and ordered to abate the nuisances from the aforementioned property on or after August 20, 2020, after passage of this Resolution, pursuant to Chanute Municipal Code, Section 8.20.080.

BE IT FURTHER RESOLVED, that any costs incurred by the City of Chanute in abating the nuisances shall be charged against the lot or subject real property as provided in Chanute Municipal Code, Section 8.20.100.

BE IT FURTHER RESOLVED, that a copy of this Resolution is to be served in any manner allowed by the Ordinance.

Adopted this 10th day of August, 2020.

_____
Jacob LaRue, Mayor

ATTEST:

_____
Tina L. Bailey, City Clerk

APPROVED AS TO FORM:

_____
David S. Brake, City Attorney

CHANUTE CITY COMMISSION
REGULAR MEETING
MONDAY, AUGUST 10, 2020

AGENDA ITEM – 9N

ITEM: New Business

SUBJECT: Resolution Declaring Property at 507 North Evergreen in violation of Chanute Municipal Code 8.20.010 (G).

BACKGROUND: On July 9, 2020, the property located at 507 North Evergreen was found by the City Inspector to be in violation of Chanute Municipal Code Section 8.20.010 (G). On July 9, 2020 a nuisance notice was sent via certified mail to owners Randall Burns or Maria Mata, notifying the owners that they were in violation of said code, due to allowing an undue excessive accumulation of brush/limbs to remain on said property. (See attached pictures of property). The owners were given until July 19, 2020 to correct the problem. If they felt this violation was sent in error they could request a hearing with the City Manager. Failure on their part to take any action would result in court action and/or abatement by the City.

ANALYSIS: Adopting the attached resolution would be the final step in this process. Per the Resolution, the owners would have until August 20, 2020 to comply with the City Code. If they fail to do so, the City would then have a contractor clean up the area and remove the brush/limbs. All associated costs incurred by the City would be charged against the lot or subject real property as provided in Chanute Code Section 8.20.100. A copy of Chanute Code Section 8.20.100 is attached for reference.

FINANCIAL CONSIDERATION: Sufficient funds are available for this work.

LEGAL CONSIDERATION: Resolution has been prepared by City Attorney.

RECOMMENDATION: A hearing with the City Manager has not been requested. Staff therefore recommends approval of the Resolution declaring the property located at 507 North Evergreen to be in violation of Chanute Municipal Code Section 8.20.010 (G) with authorization for abatement of certain nuisances.

Returned Unclaimed
7/31/20
RC 8/3/20
Resolution

Chanute
a TRADITION of INNOVATION

7/9/2020

RANDALL BURNS OR MARIA MATA
507 N EVERGREEN
CHANUTE, KS 66720

NUISANCE NOTICE – **507 N EVERGREEN AVE - CHANUTE, KS 66720**

To Whom It May Concern:

Investigation of a nuisance complaint at the above referenced address has revealed the following violation(s): ALL LIMBS/BRUSH MUST BE REMOVED FROM THE ABOVE REFERENCED PROPERTY.

The above violation(s) must be corrected by: 7/19/2020

Failure to make the necessary corrections will result in your appearance in the Chanute Municipal Court to answer the violation(s) charged, or abatement of these conditions by the City. Note: failure to make the corrections within the time allowed may constitute a separate offense for each day the violation(s) exist beyond the time allowed for correction. If you feel this notice has been sent in error you may before the aforementioned date request a hearing before the City Manager.

The City of Chanute is primarily interested in causing these violation(s) to be corrected and not repeated. When you make the necessary corrections, please contact us. We will be checking back to make sure the corrections have been made.

If you have any questions about the above named violation(s), contact me at (620) 431-5233.

Sincerely,

Janet Rollow

Janet Rollow
Code Enforcement Officer

REMOVE ALL DEAD LIMBS/BRANCHES AT
507 NORTH EVERGREEN

RESOLUTION NO. _____

A RESOLUTION DECLARING THAT THE PROPERTY LOCATED AT 507 NORTH EVERGREEN IS IN VIOLATION OF CHANUTE MUNICIPAL CODE SECTION 8.20.010 (G) AND AUTHORIZING ABATEMENT OF CERTAIN NUISANCES CONTAINED THEREON.

WHEREAS, on July 9, 2020, the property located at 507 N. Evergreen was found to be in violation of Chanute Municipal Code Section 8.20.010 (G), and notice was sent by certified mail to the owners, Randall Burns or Maria Mata, notifying said owners that they were in violation of Chanute Municipal Code, Section 8.20.010 (G), due to allowing an undue and excessive accumulation of brush/limbs to remain on said property.

WHEREAS, after service of the Notice, no request for an administrative hearing was received by the city.

WHEREAS, the City Manager is now requesting a Resolution by the City Commission to abate the aforementioned nuisances as provided by Chanute Municipal Code, Section 8.20.080.

NOW, THEREFORE, BE IT RESOLVED BY THE GOVERNING BODY OF THE CITY OF CHANUTE, KANSAS:

That on July 9, 2020, the property located at 507 N. Evergreen was found to be in violation of Chanute Municipal Code, Section 8.20.010 (G), and there has been no substantial attempt by the owners, Randall Burns or Maria Mata, to abate said nuisances. Proper notice of this violation was provided to the owners and no administrative hearing was requested. Accordingly, the City of Chanute and/or its contractors is authorized and ordered to abate the nuisances from the aforementioned property on or after August 20, 2020, after passage of this Resolution, pursuant to Chanute Municipal Code, Section 8.20.080.

BE IT FURTHER RESOLVED, that any costs incurred by the City of Chanute in abating the nuisances shall be charged against the lot or subject real property as provided in Chanute Municipal Code, Section 8.20.100.

BE IT FURTHER RESOLVED, that a copy of this Resolution is to be served in any manner allowed by the Ordinance.

Adopted this 10th day of August, 2020.

_____
Jacob LaRue, Mayor

ATTEST:

_____
Tina L. Bailey, City Clerk

APPROVED AS TO FORM:

_____
David S. Brake, City Attorney

VENDOR SET: 01 CITY OF CHANUTE
FUND : 101 GENERAL
DEPARTMENT: N/A NON-DEPARTMENTAL
INVOICE DATE RANGE: 1/01/1998 THRU 99/99/9999
PAY DATE RANGE: 7/29/2020 THRU 7/29/2020
BUDGET TO USE: CB-CURRENT BUDGET
BANK: AP

VENDOR	NAME	ITEM #	G/L ACCOUNT ACCT NAME	DESCRIPTION	CHECK # CHECK DATE	AMOUNT
01-0278	PETTY CASH	I-9366	101 21911.09.000 Building Deposits	Central Park - Jensen	103633 7/29/2020	50.00
01-0278	PETTY CASH	I-9367	101 21911.09.000 Building Deposits	Central Park - Walker	103633 7/29/2020	50.00
01-0278	PETTY CASH	I-9368	101 21911.09.000 Building Deposits	Central Park - Kiwanis	103633 7/29/2020	50.00
01-0278	PETTY CASH	I-9368	101 3000.00-4703.00 Building Rental	Central Park - Kiwanis	103633 7/29/2020	52.50
01-0278	PETTY CASH	I-9370	101 21911.02.000 Dog Deposits	Pet Deposit - Monk	103633 7/29/2020	25.00
				VENDOR 01-0278	TOTALS	227.50

DEPARTMENT NON-DEPARTMENTAL TOTAL: 227.50

VENDOR SET: 01 CITY OF CHANUTE
BANK: AP
FUND : 101 GENERAL
DEPARTMENT: 111 CITY COMMISSION
INVOICE DATE RANGE: 1/01/1998 THRU 99/99/9999
PAY DATE RANGE: 7/29/2020 THRU 7/29/2020
BUDGET TO USE: CB-CURRENT BUDGET

VENDOR	NAME	ITEM #	G/L ACCOUNT ACCT NAME	DESCRIPTION	CHECK # CHECK DATE	AMOUNT
01-0278	PETTY CASH	I-9372	101 4111.00-5703.00 Meeting Expense (In-Town)	Budget Work Session Meal	103633 7/29/2020	116.84
				VENDOR 01-0278 TOTALS		116.84
01-3897	TINA BAILEY	I-07200	101 4111.00-5703.00 Meeting Expense (In-Town)	Budget Work Session Meal 06/15	103591 7/29/2020	26.17
				VENDOR 01-3897 TOTALS		26.17
01-4385	SPARKLIGHT	I-07-20 Mem Bldg	101 4111.00-3299.00 Other Professional Services	Digital Devices Rental	103641 7/29/2020	9.39
				VENDOR 01-4385 TOTALS		9.39
				DEPARTMENT 111 CITY COMMISSION	TOTAL:	152.40

VENDOR SET: 01 CITY OF CHANUTE BANK: AP
FUND : 101 GENERAL
DEPARTMENT: 131 CITY MANAGER'S OFFICE
INVOICE DATE RANGE: 1/01/1998 THRU 99/99/9999
PAY DATE RANGE: 7/29/2020 THRU 7/29/2020
BUDGET TO USE: CB-CURRENT BUDGET

VENDOR	NAME	ITEM #	G/L ACCOUNT ACCT NAME	DESCRIPTION	CHECK # CHECK DATE	AMOUNT
01-1803	WALMART COMMUNITY	I-03540	101 4131.00-5703.00 Meeting Expense (In-Town)	Pop/Supplies - Comm Room	103649 7/29/2020	41.10
				VENDOR 01-1803 TOTALS		41.10
01-4385	SPARKLIGHT	I-07-20 Mem Bldg	101 4131.00-3299.00 Other Professional Services	Digital Devices Rental	103641 7/29/2020	9.39
				VENDOR 01-4385 TOTALS		9.39
				DEPARTMENT 131 CITY MANAGER'S OFFICE TOTAL:		50.49

VENDOR SET: 01 CITY OF CHANUTE
BANK: AP
FUND : 101 GENERAL
DEPARTMENT: 141 COMMUNITY DEVELOPMENT
INVOICE DATE RANGE: 1/01/1998 THRU 99/99/9999
PAY DATE RANGE: 7/29/2020 THRU 7/29/2020
BUDGET TO USE: CB-CURRENT BUDGET

VENDOR	NAME	ITEM #	G/L ACCOUNT ACCT NAME	DESCRIPTION	CHECK # CHECK DATE	AMOUNT
01-0235	MC CARTY'S OFFICE MACH	I-103566	101 4141.00-3399.00 Other Contractual Services	Com Ser Copier Maint	103621 7/29/2020	67.38
				VENDOR 01-0235 TOTALS		67.38
01-3014	MORGAN SHADE TREE	I-474695	101 4141.00-4502.00 Contractual Mowing	809 S Santa Fe - Mowed VL	103625 7/29/2020	22.50
01-3014	MORGAN SHADE TREE	I-474696	101 4141.00-4502.00 Contractual Mowing	Forest 7th-8th Railroad	103625 7/29/2020	45.00
01-3014	MORGAN SHADE TREE	I-474697	101 4141.00-4502.00 Contractual Mowing	Henry 11th-12th Railroad	103625 7/29/2020	30.00
01-3014	MORGAN SHADE TREE	I-474698	101 4141.00-4502.00 Contractual Mowing	7th Street Railroad	103625 7/29/2020	30.00
01-3014	MORGAN SHADE TREE	I-474699	101 4141.00-4502.00 Contractual Mowing	14th St Crossing - Railroad	103625 7/29/2020	120.00
01-3014	MORGAN SHADE TREE	I-474700	101 4141.00-4502.00 Contractual Mowing	208/210 S Evergreen - Mowed VL	103625 7/29/2020	30.00
01-3014	MORGAN SHADE TREE	I-474851	101 4141.00-4502.00 Contractual Mowing	922 S Malcolm - Mowed VL	103625 7/29/2020	45.00
01-3014	MORGAN SHADE TREE	I-474852	101 4141.00-4502.00 Contractual Mowing	0 S Malcolm - Mowed VL	103625 7/29/2020	75.00
				VENDOR 01-3014 TOTALS		397.50
01-4318	R & D LAWN SERVICE	I-892877	101 4141.00-4502.00 Contractual Mowing	1102 W Main - Mowed	103635 7/29/2020	30.00
				VENDOR 01-4318 TOTALS		30.00
				DEPARTMENT 141 COMMUNITY DEVELOPMENT TOTAL:		494.88

VENDOR SET: 01 CITY OF CHANUTE BANK: AP
FUND : 101 GENERAL
DEPARTMENT: 171 PUBLIC BUILDINGS/GROUNDS
INVOICE DATE RANGE: 1/01/1998 THRU 99/99/9999
PAY DATE RANGE: 7/29/2020 THRU 7/29/2020
BUDGET TO USE: CB-CURRENT BUDGET

VENDOR	NAME	ITEM #	G/L ACCOUNT ACCT NAME	DESCRIPTION	CHECK # CHECK DATE	AMOUNT
01-0089	CLEAVERS FARM SUPPLY	C-1911-520828	101 4171.14-6565.00 Small Tools & Apparatus	Credit	103599 7/29/2020	80.94-
01-0089	CLEAVERS FARM SUPPLY	I-2007-640501	101 4171.01-6536.00 Janitorial & Household Supplie	C:R Bumper	103599 7/29/2020	2.69
				VENDOR 01-0089 TOTALS		78.25-
01-0411	HUGO'S INDUSTRIAL SUPP	I-243360	101 4171.01-6536.00 Janitorial & Household Supplie	Bags	103610 7/29/2020	95.04
				VENDOR 01-0411 TOTALS		95.04
01-2503	GLASS DEPOT, LLC	I-2007-640078	101 4171.01-3299.00 Other Professional Services	Service Call	103607 7/29/2020	364.40
				VENDOR 01-2503 TOTALS		364.40

DEPARTMENT 171 PUBLIC BUILDINGS/GROUNDS TOTAL: 381.19

VENDOR SET: 01 CITY OF CHANUTE
FUND : 101 GENERAL
DEPARTMENT: 211 POLICE
INVOICE DATE RANGE: 1/01/1998 THRU 99/99/9999
PAY DATE RANGE: 7/29/2020 THRU 7/29/2020
BUDGET TO USE: CB-CURRENT BUDGET

BANK: AP

VENDOR	NAME	ITEM #	G/L ACCOUNT ACCT NAME	DESCRIPTION	CHECK # CHECK DATE	AMOUNT
01-0089	CLEAVERS FARM SUPPLY	I-2007-641623	101 4211.05-6599.00 Miscellaneous Operating Suppli	PD K-9 Dog Food Nalu	103599 7/29/2020	79.99
01-0089	CLEAVERS FARM SUPPLY	I-2007-641987	101 4211.05-6599.00 Miscellaneous Operating Suppli	PD Keys for #122	103599 7/29/2020	2.68
				VENDOR 01-0089 TOTALS		82.67
01-0537	MATT MORGAN	I-07272020	101 4211.04-5705.00 Mileage	SRO Training	103624 7/29/2020	172.04
				VENDOR 01-0537 TOTALS		172.04
01-1803	WALMART COMMUNITY	I-01033	101 4211.01-6101.00 Office Supplies	Comp Monitors	103649 7/29/2020	256.00
01-1803	WALMART COMMUNITY	I-01033	101 4211.05-6101.00 Office Supplies	Offices Supplies	103649 7/29/2020	74.58
				VENDOR 01-1803 TOTALS		330.58
01-4385	SPARKLIGHT	I-07-20 Mem Bldg	101 4211.01-3299.00 Other Professional Services	Digital Devices Rental	103641 7/29/2020	9.39
				VENDOR 01-4385 TOTALS		9.39
				DEPARTMENT 211 POLICE	TOTAL:	594.68

VENDOR SET: 01 CITY OF CHANUTE
BANK: AP
FUND : 101 GENERAL
DEPARTMENT: 216 DISPATCH
INVOICE DATE RANGE: 1/01/1998 THRU 99/99/9999
PAY DATE RANGE: 7/29/2020 THRU 7/29/2020
BUDGET TO USE: CB-CURRENT BUDGET

VENDOR	NAME	ITEM #	G/L ACCOUNT ACCT NAME	DESCRIPTION	CHECK # CHECK DATE	AMOUNT
01-1803	WALMART COMMUNITY	C-05545	101 4216.00-6107.00 Small Items of Equipment	Credit	103649 7/29/2020	49.92-
01-1803	WALMART COMMUNITY	C-05546	101 4216.00-6107.00 Small Items of Equipment	Credit	103649 7/29/2020	24.96-
01-1803	WALMART COMMUNITY	C-05759	101 4216.00-6599.00 Miscellaneous Operating	Credit	103649 7/29/2020	16.44-
01-1803	WALMART COMMUNITY	I-00796	101 4216.00-6101.00 Office Supplies	Blue Pens	103649 7/29/2020	17.82
01-1803	WALMART COMMUNITY	I-02660	101 4216.00-6101.00 Office Supplies	Headphones/Binders/Folders	103649 7/29/2020	21.19
01-1803	WALMART COMMUNITY	I-02660	101 4216.00-6107.00 Small Items of Equipment	Headphones/Binders/Folders	103649 7/29/2020	19.88
01-1803	WALMART COMMUNITY	I-03950	101 4216.00-6101.00 Office Supplies	Office Supplies	103649 7/29/2020	29.67
01-1803	WALMART COMMUNITY	I-04741	101 4216.00-6101.00 Office Supplies	Clock/Glue	103649 7/29/2020	23.89
01-1803	WALMART COMMUNITY	I-04955	101 4216.00-6599.00 Miscellaneous Operating	Batteries/Desk Fans	103649 7/29/2020	29.22
01-1803	WALMART COMMUNITY	I-06733	101 4216.00-6101.00 Office Supplies	Office Supplies	103649 7/29/2020	41.81
01-1803	WALMART COMMUNITY	I-06743	101 4216.00-6599.00 Miscellaneous Operating	TP	103649 7/29/2020	29.77
01-1803	WALMART COMMUNITY	I-06743	101 4216.00-6101.00 Office Supplies	Office Supplies	103649 7/29/2020	17.91
01-1803	WALMART COMMUNITY	I-06749	101 4216.00-6536.00 Janitorial & Household	Trash Bags	103649 7/29/2020	12.98
01-1803	WALMART COMMUNITY	I-07412	101 4216.00-6599.00 Miscellaneous Operating	Desk Fans	103649 7/29/2020	26.64
01-1803	WALMART COMMUNITY	I-08472	101 4216.00-6101.00 Office Supplies	Folders/Cups	103649 7/29/2020	21.03

VENDOR 01-1803 TOTALS 200.49

DEPARTMENT 216 DISPATCH TOTAL: 200.49

VENDOR SET: 01 CITY OF CHANUTE
BANK: AP
FUND : 101 GENERAL
DEPARTMENT: 221 FIRE
INVOICE DATE RANGE: 1/01/1998 THRU 99/99/9999
PAY DATE RANGE: 7/29/2020 THRU 7/29/2020
BUDGET TO USE: CB-CURRENT BUDGET

VENDOR	NAME	ITEM #	G/L ACCOUNT ACCT NAME	DESCRIPTION	CHECK # CHECK DATE	AMOUNT
01-1803	WALMART COMMUNITY	I-06310	101 4221.02-6536.00 Janitorial & Household Supplie	Cleaning Supplies/1st Aid/Soap	103649 7/29/2020	202.81
01-1803	WALMART COMMUNITY	I-08386	101 4221.02-6107.00 Small Items of Equipment	Coolers for Tower 1/Gatorade	103649 7/29/2020	73.73
01-1803	WALMART COMMUNITY	I-08943	101 4221.02-4304.00 R&M:Communications Equipment	Phones	103649 7/29/2020	23.94
				VENDOR 01-1803 TOTALS		300.48
01-4385	SPARKLIGHT	I-07-20 Mem Bldg	101 4221.01-3299.00 Other Professional Services	Digital Devices Rental	103641 7/29/2020	4.51
				VENDOR 01-4385 TOTALS		4.51
				DEPARTMENT 221 FIRE	TOTAL:	304.99

VENDOR SET: 01 CITY OF CHANUTE BANK: AP
FUND : 101 GENERAL
DEPARTMENT: 311 STREETS AND ROADS
INVOICE DATE RANGE: 1/01/1998 THRU 99/99/9999
PAY DATE RANGE: 7/29/2020 THRU 7/29/2020
BUDGET TO USE: CB-CURRENT BUDGET

VENDOR	NAME	ITEM #	G/L ACCOUNT ACCT NAME	DESCRIPTION	CHECK # CHECK DATE	AMOUNT
01-0089	CLEAVERS FARM SUPPLY	C-1912-531508	101 4311.01-6603.00 Cement and Concrete Supplies	Credit	103599 7/29/2020	13.96-
01-0089	CLEAVERS FARM SUPPLY	I-2007-639314	101 4311.01-6599.00 Miscellaneous Operating Suppli	Propane	103599 7/29/2020	25.28
01-0089	CLEAVERS FARM SUPPLY	I-2007-639533	101 4311.01-6599.00 Miscellaneous Operating Suppli	Scoop	103599 7/29/2020	64.78
01-0089	CLEAVERS FARM SUPPLY	I-2007-640076	101 4311.01-6599.00 Miscellaneous Operating Suppli	Flint	103599 7/29/2020	3.59
01-0089	CLEAVERS FARM SUPPLY	I-2007-640079	101 4311.01-6599.00 Miscellaneous Operating Suppli	Propane	103599 7/29/2020	25.28
01-0089	CLEAVERS FARM SUPPLY	I-2007-641452	101 4311.01-6705.00 Machinery and Equipment Repair	Screws	103599 7/29/2020	22.49
01-0089	CLEAVERS FARM SUPPLY	I-2007-642371	101 4311.01-6599.00 Miscellaneous Operating Suppli	Propane	103599 7/29/2020	44.39
01-0089	CLEAVERS FARM SUPPLY	I-2007-939500	101 4311.01-6548.00 Painting Supplies	Cover/Chalk	103599 7/29/2020	14.00
				VENDOR 01-0089	TOTALS	185.85
01-0268	O'REILLY AUTOMOTIVE ST	I-0136-472092	101 4311.01-6705.00 Machinery and Equipment Repair	Keyless #296	103628 7/29/2020	7.99
				VENDOR 01-0268	TOTALS	7.99
01-0311	SHERWIN WILLIAMS	I-7551-6 07-2020	101 4311.01-6548.00 Painting Supplies	Paint	103639 7/29/2020	28.13
01-0311	SHERWIN WILLIAMS	I-7577-1	101 4311.01-6548.00 Painting Supplies	Paint Supplies	103639 7/29/2020	150.40
01-0311	SHERWIN WILLIAMS	I-7616-7	101 4311.01-6548.00 Painting Supplies	Paint/Supplies	103639 7/29/2020	71.44
				VENDOR 01-0311	TOTALS	249.97
01-0715	CLEAN UNIFORM COMPANY	I-20151326	101 4311.01-4409.00 Other Rentals/Leases	Uniforms - Street	103598 7/29/2020	29.12
				VENDOR 01-0715	TOTALS	29.12
				DEPARTMENT 311 STREETS AND ROADS	TOTAL:	472.93

VENDOR SET: 01 CITY OF CHANUTE
BANK: AP
FUND : 101 GENERAL
DEPARTMENT: 321 CEMETERY
INVOICE DATE RANGE: 1/01/1998 THRU 99/99/9999
PAY DATE RANGE: 7/29/2020 THRU 7/29/2020
BUDGET TO USE: CB-CURRENT BUDGET

VENDOR	NAME	ITEM #	G/L ACCOUNT ACCT NAME	DESCRIPTION	CHECK # CHECK DATE	AMOUNT
01-2913	MIDWEST MINERALS LLC	I-444600	101 4321.00-6616.00 Rock	Rock	103623 7/29/2020	512.65
				VENDOR 01-2913 TOTALS		512.65
				DEPARTMENT 321 CEMETERY	TOTAL:	512.65

VENDOR SET: 01 CITY OF CHANUTE
BANK: AP
FUND : 101 GENERAL
DEPARTMENT: 331 AIRPORT
INVOICE DATE RANGE: 1/01/1998 THRU 99/99/9999
PAY DATE RANGE: 7/29/2020 THRU 7/29/2020
BUDGET TO USE: CB-CURRENT BUDGET

VENDOR	NAME	ITEM #	G/L ACCOUNT ACCT NAME	DESCRIPTION	CHECK # CHECK DATE	AMOUNT
01-4375	CDL	I-W29350	101 4331.00-4313.00 R&M:Plumbing/Heating/Electric	Replace Water Heater	103594 7/29/2020	869.65
				VENDOR 01-4375 TOTALS		869.65
				DEPARTMENT 331 AIRPORT	TOTAL:	869.65

VENDOR SET: 01 CITY OF CHANUTE
FUND : 101 GENERAL
DEPARTMENT: 511 PARKS
INVOICE DATE RANGE: 1/01/1998 THRU 99/99/9999
PAY DATE RANGE: 7/29/2020 THRU 7/29/2020
BUDGET TO USE: CB-CURRENT BUDGET

VENDOR	NAME	ITEM #	G/L ACCOUNT ACCT NAME	DESCRIPTION	CHECK # CHECK DATE	AMOUNT
01-0089	CLEAVERS FARM SUPPLY	I-2007-639577	101 4511.00-6603.00 Cement and Concrete Supplies	Concrete	103599 7/29/2020	33.76
01-0089	CLEAVERS FARM SUPPLY	I-2007-642072	101 4511.00-6565.00 Small Tools & Apparatus	Misc Tools	103599 7/29/2020	40.95
	PROJ: 217-2018-002	PARKS		Santa Fe Baseball Complex		
				VENDOR 01-0089 TOTALS		74.71
01-0411	HUGO'S INDUSTRIAL SUPP	I-243160	101 4511.00-6536.00 Janitorial & Household Supplie	Trash Bags/Mean Green	103610 7/29/2020	399.00
				VENDOR 01-0411 TOTALS		399.00
01-2512	YOUNG'S WELDING	I-207550	101 4511.00-6699.00 Misc Building & Construction	Sheet Metal	103654 7/29/2020	241.05
				VENDOR 01-2512 TOTALS		241.05
				DEPARTMENT 511 PARKS	TOTAL:	714.76

VENDOR SET: 01 CITY OF CHANUTE BANK: AP
FUND : 101 GENERAL
DEPARTMENT: 512 SWIMMING POOL
INVOICE DATE RANGE: 1/01/1998 THRU 99/99/9999
PAY DATE RANGE: 7/29/2020 THRU 7/29/2020
BUDGET TO USE: CB-CURRENT BUDGET

VENDOR	NAME	ITEM #	G/L ACCOUNT ACCT NAME	DESCRIPTION	CHECK # CHECK DATE	AMOUNT
01-0089	CLEAVERS FARM SUPPLY	I-2007-641284	101 4512.00-6536.00 Janitorial & Household Supplie	Glass Cleaner	103599 7/29/2020	21.54
01-0089	CLEAVERS FARM SUPPLY	I-2007-641317	101 4512.00-6536.00 Janitorial & Household Supplie	Broom	103599 7/29/2020	11.69
				VENDOR 01-0089 TOTALS		33.23
01-0337	UTILITY CONSULTANTS, I	I-25708	101 4512.00-3212.00 Employee Drug Testing	Pre Employment Testing	103647 7/29/2020	60.00
				VENDOR 01-0337 TOTALS		60.00
01-0657	LOCKE SUPPLY COMPANY	I-40664337-00	101 4512.00-6711.00 Plumbing Supplies	Compression Sleeve	103620 7/29/2020	0.61
				VENDOR 01-0657 TOTALS		0.61
01-0746	ARLAN COMPANY, INC.	I-12508	101 4512.00-6712.00 Pool Maintenance Supplies	Test Kits/Refill Kits	103588 7/29/2020	153.60
01-0746	ARLAN COMPANY, INC.	I-12508	101 4512.00-6719.00 Other Supplies	Tubes/Whistles/Dive Brick	103588 7/29/2020	576.19
01-0746	ARLAN COMPANY, INC.	I-12566	101 4512.00-6536.00 Janitorial & Household Supplie	Disinfectant	103588 7/29/2020	100.00
				VENDOR 01-0746 TOTALS		829.79
01-1803	WALMART COMMUNITY	I-00096	101 4512.00-6508.00 Clothing and Wearing Apparel	Shirts	103649 7/29/2020	81.92
01-1803	WALMART COMMUNITY	I-00096	101 4512.00-6101.00 Office Supplies	Office Supplies	103649 7/29/2020	11.71
01-1803	WALMART COMMUNITY	I-00096	101 4512.00-6510.00 Concessions-Swimming Pool	Concessions	103649 7/29/2020	53.40
01-1803	WALMART COMMUNITY	I-02334 07-2020	101 4512.00-6510.00 Concessions-Swimming Pool	Water	103649 7/29/2020	42.72
01-1803	WALMART COMMUNITY	I-06802	101 4512.00-6536.00 Janitorial & Household Supplie	Cleaning Supplies	103649 7/29/2020	74.16
01-1803	WALMART COMMUNITY	I-09014	101 4512.00-6510.00 Concessions-Swimming Pool	Concessions	103649 7/29/2020	416.17
				VENDOR 01-1803 TOTALS		680.08

VENDOR SET: 01 CITY OF CHANUTE
BANK: AP
FUND : 101 GENERAL
DEPARTMENT: 512 SWIMMING POOL
INVOICE DATE RANGE: 1/01/1998 THRU 99/99/9999
PAY DATE RANGE: 7/29/2020 THRU 7/29/2020
BUDGET TO USE: CB-CURRENT BUDGET

VENDOR	NAME	ITEM #	G/L ACCOUNT ACCT NAME	DESCRIPTION	CHECK # CHECK DATE	AMOUNT
01-5169	UNITED INDUSTRIES INCO	I-0071454-IN	101 4512.00-6711.00 Plumbing Supplies	Adapters/Ferrule	103646 7/29/2020	49.40
				VENDOR 01-5169 TOTALS		49.40
				DEPARTMENT 512 SWIMMING POOL	TOTAL:	1,653.11

VENDOR SET: 01 CITY OF CHANUTE BANK: AP
FUND : 101 GENERAL
DEPARTMENT: 513 BASEBALL/SOFTBALL PARKS
INVOICE DATE RANGE: 1/01/1998 THRU 99/99/9999
PAY DATE RANGE: 7/29/2020 THRU 7/29/2020
BUDGET TO USE: CB-CURRENT BUDGET

VENDOR	NAME	ITEM #	G/L ACCOUNT ACCT NAME	DESCRIPTION	CHECK # CHECK DATE	AMOUNT
01-0089	CLEAVERS FARM SUPPLY	C-2007-641562	101 4513.00-6603.00 Cement and Concrete Supplies	Rewall-Blockmesh Shorted	103599 7/29/2020	23.46-
	PROJ: 217-2018-002	PARKS	Santa Fe Baseball Complex			
01-0089	CLEAVERS FARM SUPPLY	I-2007-638210	101 4513.00-6553.00 Plumbing Supplies	Misc Plumbing Supplies	103599 7/29/2020	38.33
	PROJ: 217-2018-002	PARKS	Santa Fe Baseball Complex			
01-0089	CLEAVERS FARM SUPPLY	I-2007-638406	101 4513.00-6553.00 Plumbing Supplies	Cap/Elbows	103599 7/29/2020	11.85
	PROJ: 217-2018-002	PARKS	Santa Fe Baseball Complex			
01-0089	CLEAVERS FARM SUPPLY	I-2007-638754	101 4513.00-6515.00 Fencing Supplies	Nuts/Bolts	103599 7/29/2020	28.00
	PROJ: 217-2018-002	PARKS	Santa Fe Baseball Complex			
01-0089	CLEAVERS FARM SUPPLY	I-2007-638759	101 4513.00-6515.00 Fencing Supplies	Brace Bands	103599 7/29/2020	12.80
	PROJ: 217-2018-002	PARKS	Santa Fe Baseball Complex			
01-0089	CLEAVERS FARM SUPPLY	I-2007-639309	101 4513.00-6603.00 Cement and Concrete Supplies	Rebar	103599 7/29/2020	10.42
	PROJ: 217-2018-002	PARKS	Santa Fe Baseball Complex			
01-0089	CLEAVERS FARM SUPPLY	I-2007-641550	101 4513.00-6603.00 Cement and Concrete Supplies	Rewall-Blockmesh	103599 7/29/2020	156.40
	PROJ: 217-2018-002	PARKS	Santa Fe Baseball Complex			
01-0089	CLEAVERS FARM SUPPLY	I-2007-642075	101 4513.00-6532.00 Hardware	Turnbuckle	103599 7/29/2020	31.49
				VENDOR 01-0089 TOTALS		265.83
01-5262	HAMMERSON	I-16639	101 4513.00-6603.00 Cement and Concrete Supplies	Concrete	103609 7/29/2020	1,666.00
	PROJ: 217-2018-002	PARKS	Santa Fe Baseball Complex			
				VENDOR 01-5262 TOTALS		1,666.00

DEPARTMENT 513 BASEBALL/SOFTBALL PARKS TOTAL: 1,931.83

VENDOR SET: 01 CITY OF CHANUTE
FUND : 101 GENERAL
DEPARTMENT: 516 GOLF COURSE
INVOICE DATE RANGE: 1/01/1998 THRU 99/99/9999
PAY DATE RANGE: 7/29/2020 THRU 7/29/2020
BUDGET TO USE: CB-CURRENT BUDGET

VENDOR	NAME	ITEM #	G/L ACCOUNT ACCT NAME	DESCRIPTION	CHECK # CHECK DATE	AMOUNT
01-0268	O'REILLY AUTOMOTIVE ST	I-0136-471867	101 4516.00-6705.00 Machinery and Equipment Repair	Belt	103628 7/29/2020	11.96
				VENDOR 01-0268 TOTALS		11.96
01-1783	PEPSI-COLA	I-27831006	101 4516.00-6528.00 Food	Beverages	103632 7/29/2020	102.16
01-1783	PEPSI-COLA	I-97726305	101 4516.00-6528.00 Food	Beverages	103632 7/29/2020	63.99
				VENDOR 01-1783 TOTALS		166.15
01-1803	WALMART COMMUNITY	I-00469 07-2020	101 4516.00-6528.00 Food	Concessions	103649 7/29/2020	93.44
01-1803	WALMART COMMUNITY	I-00469 07-2020	101 4516.00-6101.00 Office Supplies	Office Supplies	103649 7/29/2020	12.02
01-1803	WALMART COMMUNITY	I-00986	101 4516.00-6536.00 Janitorial & Household Supplie	Vacuum	103649 7/29/2020	76.00
01-1803	WALMART COMMUNITY	I-02538	101 4516.00-6528.00 Food	Concessions	103649 7/29/2020	170.52
01-1803	WALMART COMMUNITY	I-04112	101 4516.00-6536.00 Janitorial & Household Supplie	Cleaner	103649 7/29/2020	50.66
01-1803	WALMART COMMUNITY	I-04112	101 4516.00-6528.00 Food	Concessions	103649 7/29/2020	69.88
01-1803	WALMART COMMUNITY	I-04236	101 4516.00-6528.00 Food	Concessions	103649 7/29/2020	109.96
01-1803	WALMART COMMUNITY	I-04236	101 4516.00-6536.00 Janitorial & Household Supplie	Cleaner	103649 7/29/2020	4.48
01-1803	WALMART COMMUNITY	I-07928 07-2020	101 4516.00-6101.00 Office Supplies	Hanging Folders	103649 7/29/2020	28.82
				VENDOR 01-1803 TOTALS		615.78
01-2196	CHANDLER OIL, LLC	I-60260	101 4516.00-6203.00 Unleaded Fuel	Unleaded Fuel	103596 7/29/2020	480.40
01-2196	CHANDLER OIL, LLC	I-60260	101 4516.00-6201.00 Diesel Fuel	Diesel Fuel	103596 7/29/2020	249.75
				VENDOR 01-2196 TOTALS		730.15
				DEPARTMENT 516 GOLF COURSE	TOTAL:	1,524.04

VENDOR SET: 01 CITY OF CHANUTE BANK: AP
FUND : 101 GENERAL
DEPARTMENT: 523 AUDITORIUM MGT SERVICES
INVOICE DATE RANGE: 1/01/1998 THRU 99/99/9999
PAY DATE RANGE: 7/29/2020 THRU 7/29/2020
BUDGET TO USE: CB-CURRENT BUDGET

VENDOR	NAME	ITEM #	G/L ACCOUNT ACCT NAME	DESCRIPTION	CHECK # CHECK DATE	AMOUNT
01-4385	SPARKLIGHT	I-07-20 Mem Bldg	101 4523.00-3299.00 Other Professional Services	Digital Devices Rental	103641 7/29/2020	4.52
				VENDOR 01-4385 TOTALS		4.52
				DEPARTMENT 523 AUDITORIUM MGT SERVICES TOTAL:		4.52
				VENDOR SET 101 GENERAL TOTAL:		10,090.11

VENDOR SET: 01 CITY OF CHANUTE
FUND : 231 SPECIAL HIGHWAY IMPROVMNT
DEPARTMENT: 311 STREETS AND ROADS
INVOICE DATE RANGE: 1/01/1998 THRU 99/99/9999
PAY DATE RANGE: 7/29/2020 THRU 7/29/2020
BUDGET TO USE: CB-CURRENT BUDGET

VENDOR	NAME	ITEM #	G/L ACCOUNT ACCT NAME	DESCRIPTION	CHECK # CHECK DATE	AMOUNT
01-0311	SHERWIN WILLIAMS	I-7414-7	231 4311.00-7301.00 Traffic Paint/Beads Roads, Streets & Alleys	PO: 20-0117	103639 7/29/2020	13,927.20
				VENDOR 01-0311 TOTALS		13,927.20
			DEPARTMENT 311 STREETS AND ROADS		TOTAL:	13,927.20
			VENDOR SET 231 SPECIAL HIGHWAY IMPROVMNTTOTAL:			13,927.20

VENDOR SET: 01 CITY OF CHANUTE
BANK: AP
FUND : 311 CAPITAL IMPROVEMENT #1
DEPARTMENT: 420 WATER PROJECTS
INVOICE DATE RANGE: 1/01/1998 THRU 99/99/9999
PAY DATE RANGE: 7/29/2020 THRU 7/29/2020
BUDGET TO USE: CB-CURRENT BUDGET

VENDOR	NAME	ITEM #	G/L ACCOUNT ACCT NAME	DESCRIPTION	CHECK # CHECK DATE	AMOUNT
01-4057	WILSON AND COMPANY	I-91428	311 4420.00-3214.00 Engineering Services	Chanute WTP SCADA Upgrade	103653 7/29/2020	555.33
	PROJ: 520-2017-001	WATER PROJECTS	WTP SCADA Upgrade			
				VENDOR 01-4057 TOTALS		555.33
				DEPARTMENT 420 WATER PROJECTS	TOTAL:	555.33
				VENDOR SET 311 CAPITAL IMPROVEMENT #1	TOTAL:	555.33

VENDOR SET: 01 CITY OF CHANUTE
FUND : 321 CAPITAL IMPROVEMENT #2
DEPARTMENT: 513 BASEBALL/SOFTBALL PARKS
INVOICE DATE RANGE: 1/01/1998 THRU 99/99/9999
PAY DATE RANGE: 7/29/2020 THRU 7/29/2020
BUDGET TO USE: CB-CURRENT BUDGET

BANK: AP

VENDOR	NAME	ITEM #	G/L ACCOUNT ACCT NAME	DESCRIPTION	CHECK # CHECK DATE	AMOUNT
01-5298	SPINTURF, LLC	I-6189	321 4513.00-7305.00 Parks/Recreational Facilities	Turf Lease - Pay #1	103642 7/29/2020	110,916.16
	PROJ: 217-2018-002	PARKS		Santa Fe Baseball Complex		
				VENDOR 01-5298 TOTALS		110,916.16
				DEPARTMENT 513 BASEBALL/SOFTBALL PARKS TOTAL:		110,916.16
				VENDOR SET 321 CAPITAL IMPROVEMENT #2 TOTAL:		110,916.16

VENDOR SET: 01 CITY OF CHANUTE
FUND : 501 ELECTRIC UTILITY
DEPARTMENT: N/A NON-DEPARTMENTAL
INVOICE DATE RANGE: 1/01/1998 THRU 99/99/9999
PAY DATE RANGE: 7/29/2020 THRU 7/29/2020
BUDGET TO USE: CB-CURRENT BUDGET
BANK: AP

VENDOR	NAME	ITEM #	G/L ACCOUNT ACCT NAME	DESCRIPTION	CHECK # CHECK DATE	AMOUNT
01-0086	CITY OF CHANUTE	I-07162020	501 3000.00-7101.00 Residential Sales-Inside	Setoff Collection Fees	103597 7/29/2020	147.90
				VENDOR 01-0086 TOTALS		147.90
01-4426	LORINA ROLES	I-45-1000-05 07-2020	501 3000.00-7101.00 Residential Sales-Inside	Pull from Amp	103638 7/29/2020	75.00
				VENDOR 01-4426 TOTALS		75.00
				DEPARTMENT NON-DEPARTMENTAL	TOTAL:	222.90

VENDOR SET: 01 CITY OF CHANUTE
FUND : 501 ELECTRIC UTILITY
DEPARTMENT: 411 ELECTRIC PRODUCTION
INVOICE DATE RANGE: 1/01/1998 THRU 99/99/9999
PAY DATE RANGE: 7/29/2020 THRU 7/29/2020
BUDGET TO USE: CB-CURRENT BUDGET

VENDOR	NAME	ITEM #	G/L ACCOUNT ACCT NAME	DESCRIPTION	CHECK # CHECK DATE	AMOUNT
01-0088	CLEAVERS FARM & HOME	I-2007-640307	501 4411.01-4329.00 R&M:Other Machinery/Equipment	Nails/Tube/Fuel line	103601 7/29/2020	11.28
01-0088	CLEAVERS FARM & HOME	I-2007-641933	501 4411.01-4329.00 R&M:Other Machinery/Equipment	Bushing	103601 7/29/2020	6.18
				VENDOR 01-0088 TOTALS		17.46
01-0173	IBT INC.	I-7681400	501 4411.01-4329.00 R&M:Other Machinery/Equipment	Regulator	103611 7/29/2020	991.22
				VENDOR 01-0173 TOTALS		991.22
01-0229	LOCKE SUPPLY COMPANY	I-40698049-00	501 4411.01-4313.00 R&M:Plumbing/Heating/Electric	Filters	103619 7/29/2020	68.50
01-0229	LOCKE SUPPLY COMPANY	I-40717156-00	501 4411.01-4329.00 R&M:Other Machinery/Equipment	Blades/Misc	103619 7/29/2020	59.31
01-0229	LOCKE SUPPLY COMPANY	I-40724868-00	501 4411.01-6514.00 Electrical Supplies	Twisters	103619 7/29/2020	54.24
01-0229	LOCKE SUPPLY COMPANY	I-40771593-00	501 4411.01-6599.00 Miscellaneous Operating Suppli	Ties	103619 7/29/2020	6.28
				VENDOR 01-0229 TOTALS		188.33
01-0311	SHERWIN WILLIAMS	I-7636-5	501 4411.01-6548.00 Painting Supplies	Paint	103639 7/29/2020	58.31
				VENDOR 01-0311 TOTALS		58.31
01-0715	CLEAN UNIFORM COMPANY	I-20151334	501 4411.01-6507.00 Clothing - Protective	Uniforms - Pwr Plt	103598 7/29/2020	173.49
				VENDOR 01-0715 TOTALS		173.49
01-1803	WALMART COMMUNITY	I-02332	501 4411.01-6536.00 Janitorial & Household Supplie	Janitorial Supplies	103649 7/29/2020	46.36
01-1803	WALMART COMMUNITY	I-09647	501 4411.01-6539.00 Lamps	Janitorial Supplies	103649 7/29/2020	46.92
				VENDOR 01-1803 TOTALS		93.28

VENDOR SET: 01 CITY OF CHANUTE
FUND : 501 ELECTRIC UTILITY
DEPARTMENT: 411 ELECTRIC PRODUCTION
INVOICE DATE RANGE: 1/01/1998 THRU 99/99/9999
PAY DATE RANGE: 7/29/2020 THRU 7/29/2020
BUDGET TO USE: CB-CURRENT BUDGET
BANK: AP

VENDOR	NAME	ITEM #	G/L ACCOUNT ACCT NAME	DESCRIPTION	CHECK # CHECK DATE	AMOUNT
01-3034	BRANDON WESTERMAN	I-07212020	501 4411.01-5704.00 Meeting Expense (Out-of-Town)	Tour Gas Odorant System	103651 7/29/2020	16.00
01-3034	BRANDON WESTERMAN	I-07242020	501 4411.01-5704.00 Meeting Expense (Out-of-Town)	Tour Gas Odorant System	103651 7/29/2020	16.00
				VENDOR 01-3034 TOTALS		32.00
01-3805	AIR HYGIENE, INC.	I-12707	501 4411.01-3215.00 Environmental & Ecological Ser	RATA Testing PO: 20-0090	103584 7/29/2020	3,936.00
				VENDOR 01-3805 TOTALS		3,936.00
01-3904	VERIZON WIRELESS	I-9858502388	501 4411.01-5211.00 Telephone Services	SEG - Wireless - Sabetha	103648 7/29/2020	40.53
01-3904	VERIZON WIRELESS	I-9858502388	501 4411.01-5211.00 Telephone Services	SEG - Wireless - Fredonia	103648 7/29/2020	40.53
01-3904	VERIZON WIRELESS	I-9858502388	501 4411.01-5211.00 Telephone Services	SEG - Wireless - Centralia	103648 7/29/2020	40.53
01-3904	VERIZON WIRELESS	I-9858502388	501 4411.01-5211.00 Telephone Services	SEG - Wireless - Arcadia	103648 7/29/2020	40.53
01-3904	VERIZON WIRELESS	I-9858502388	501 4411.01-5211.00 Telephone Services	SEG - Wireless - Axtell	103648 7/29/2020	40.53
				VENDOR 01-3904 TOTALS		202.65
01-5272	STI CEMS SERVICES LLC	I-27166	501 4411.01-3215.00 Environmental & Ecological Ser	Spare parts for New CEMS PO: 20-0120	103644 7/29/2020	9,394.11
				VENDOR 01-5272 TOTALS		9,394.11
				DEPARTMENT 411 ELECTRIC PRODUCTION TOTAL:		15,086.85

VENDOR SET: 01 CITY OF CHANUTE
FUND : 501 ELECTRIC UTILITY
DEPARTMENT: 413 ELECTRIC DISTRIBUTION
INVOICE DATE RANGE: 1/01/1998 THRU 99/99/9999
PAY DATE RANGE: 7/29/2020 THRU 7/29/2020
BUDGET TO USE: CB-CURRENT BUDGET

VENDOR	NAME	ITEM #	G/L ACCOUNT ACCT NAME	DESCRIPTION		CHECK # CHECK DATE	AMOUNT
01-0088	CLEAVERS FARM & HOME	I-2007-640314	501 4413.02-6532.00 Hardware	Swivel Connector		103601 7/29/2020	5.90
01-0088	CLEAVERS FARM & HOME	I-2007-641208	501 4413.02-6532.00 Hardware	Eye Bolt		103601 7/29/2020	9.84
					VENDOR 01-0088	TOTALS	15.74
01-0131	FASTENAL COMPANY	I-KSCHA102048	501 4413.02-6599.00 Miscellaneous Operating Suppli	Batteries		103604 7/29/2020	13.71
					VENDOR 01-0131	TOTALS	13.71
01-0173	IBT INC.	I-7680700	501 4413.02-6599.00 Miscellaneous Operating Suppli	Key Stock		103611 7/29/2020	2.67
					VENDOR 01-0173	TOTALS	2.67
01-0218	KRIZ-DAVIS - TPK	I-919746566	501 4413.02-6532.00 Hardware	Arrestors	PO: 20-0061	103616 7/29/2020	1,655.12
01-0218	KRIZ-DAVIS - TPK	I-919746566	501 4413.02-6579.00 Wire	Wire	PO: 20-0061	103616 7/29/2020	785.04
					VENDOR 01-0218	TOTALS	2,440.16
01-0229	LOCKE SUPPLY COMPANY	I-40710107-00	501 4413.04-6532.00 Hardware	Wirehold		103619 7/29/2020	22.43
01-0229	LOCKE SUPPLY COMPANY	I-40710278-00	501 4413.04-6514.00 Electrical Supplies	Butt Connectors		103619 7/29/2020	6.48
01-0229	LOCKE SUPPLY COMPANY	I-40710541-00	501 4413.02-6579.00 Wire	Conduit		103619 7/29/2020	252.34
01-0229	LOCKE SUPPLY COMPANY	I-40714781-00	501 4413.04-6541.00 Lighting Supplies	Lug/Contactor/LED Light		103619 7/29/2020	283.61
01-0229	LOCKE SUPPLY COMPANY	I-40759254-00	501 4413.04-6532.00 Hardware	Covers		103619 7/29/2020	129.85
					VENDOR 01-0229	TOTALS	694.71
01-0318	STANION WHOLESALE	I-4969199-00	501 4413.04-6532.00 Hardware	Connectors		103643 7/29/2020	34.55
01-0318	STANION WHOLESALE	I-4970935-00	501 4413.04-6514.00 Electrical Supplies	Butt Splices		103643 7/29/2020	52.62

VENDOR SET: 01 CITY OF CHANUTE
FUND : 501 ELECTRIC UTILITY
DEPARTMENT: 413 ELECTRIC DISTRIBUTION
INVOICE DATE RANGE: 1/01/1998 THRU 99/99/9999
PAY DATE RANGE: 7/29/2020 THRU 7/29/2020
BUDGET TO USE: CB-CURRENT BUDGET
BANK: AP

VENDOR	NAME	ITEM #	G/L ACCOUNT ACCT NAME	DESCRIPTION	CHECK # CHECK DATE	AMOUNT
01-0318	STANION WHOLESALE	I-4970935-00	501 4413.04-6572.00 Tools	Wire Crimper/Nut Driver	103643 7/29/2020	50.71
01-0318	STANION WHOLESALE	I-4971307-00	501 4413.04-6532.00 Hardware	Covers	103643 7/29/2020	93.56
01-0318	STANION WHOLESALE	I-4971319-00	501 4413.04-6539.00 Lamps	Yard Light Bulbs	103643 7/29/2020	239.35
				VENDOR 01-0318	TOTALS	470.79
01-0657	LOCKE SUPPLY COMPANY	I-40646647-00	501 4413.04-6514.00 Electrical Supplies	Covers/Hubs	103620 7/29/2020	35.87
	PROJ: 217-2018-002	PARKS		Santa Fe Baseball Complex		
				VENDOR 01-0657	TOTALS	35.87
01-0715	CLEAN UNIFORM COMPANY	I-20151329	501 4413.02-6507.00 Clothing - Protective	Uniforms - Elec Dist	103598 7/29/2020	98.34
01-0715	CLEAN UNIFORM COMPANY	I-20151330	501 4413.04-6507.00 Clothing - Protective	Uniforms - Elec Meter	103598 7/29/2020	72.81
				VENDOR 01-0715	TOTALS	171.15
01-1718	PROFESSIONAL GLASS	I-C0034567	501 4413.02-4329.00 R&M:Other Machinery/Equipment	Repair Windshield - #357	103634 7/29/2020	89.95
				VENDOR 01-1718	TOTALS	89.95
01-4660	B & B OUTDOOR SERVICE	I-4609	501 4413.02-4329.00 R&M:Other Machinery/Equipment	Ignition Module/Labor	103589 7/29/2020	210.44
01-4660	B & B OUTDOOR SERVICE	I-4609	501 4413.02-6705.00 Machinery and Equipment Repair	Bars/Chains	103589 7/29/2020	132.67
				VENDOR 01-4660	TOTALS	343.11
01-5001	ANIXTER	I-4571616-03	501 4413.02-6532.00 Hardware	Cluster Mounts PO: 20-0072	103587 7/29/2020	621.96
				VENDOR 01-5001	TOTALS	621.96

DEPARTMENT 413 ELECTRIC DISTRIBUTION TOTAL: 4,899.82

VENDOR SET 501 ELECTRIC UTILITY TOTAL: 20,209.57

VENDOR SET: 01 CITY OF CHANUTE
FUND : 502 WATER UTILITY
DEPARTMENT: 421 WATER SOURCE OF SUPPLY
INVOICE DATE RANGE: 1/01/1998 THRU 99/99/9999
PAY DATE RANGE: 7/29/2020 THRU 7/29/2020
BUDGET TO USE: CB-CURRENT BUDGET

BANK: AP

VENDOR	NAME	ITEM #	G/L ACCOUNT ACCT NAME	DESCRIPTION	CHECK # CHECK DATE	AMOUNT
01-1886	WALTERS-MORGAN	I-01-002030	502 4421.01-4329.00 Parts and Labor @ Intake R&M: Mach/Equip-Intake Bldg	PO: 20-0058	103650 7/29/2020	3,029.20
				VENDOR 01-1886 TOTALS		3,029.20
				DEPARTMENT 421 WATER SOURCE OF SUPPLY TOTAL:		3,029.20

VENDOR SET: 01 CITY OF CHANUTE BANK: AP
FUND : 502 WATER UTILITY
DEPARTMENT: 422 WATER TREATMENT PLANT
INVOICE DATE RANGE: 1/01/1998 THRU 99/99/9999
PAY DATE RANGE: 7/29/2020 THRU 7/29/2020
BUDGET TO USE: CB-CURRENT BUDGET

VENDOR	NAME	ITEM #	G/L ACCOUNT ACCT NAME	DESCRIPTION	CHECK # CHECK DATE	AMOUNT
01-0089	CLEAVERS FARM SUPPLY	I-2007-640106	502 4422.01-6548.00 Painting Supplies	Flex Drain/Adapter/Foam/Brush/	103599 7/29/2020	59.14
01-0089	CLEAVERS FARM SUPPLY	I-2007-640106	502 4422.01-6536.00 Janitorial & Household Supplie	Pine Sol	103599 7/29/2020	11.69
				VENDOR 01-0089 TOTALS		70.83
01-0155	HACH COMPANY	I-12042510	502 4422.01-6537.00 Laboratory Supplies	Lab Supplies PO: 20-0024	103608 7/29/2020	729.67
				VENDOR 01-0155 TOTALS		729.67
01-0268	O'REILLY AUTOMOTIVE ST	I-0136-472088	502 4422.01-6705.00 Machinery and Equipment Repair	Tool Box Parts #182	103628 7/29/2020	41.60
				VENDOR 01-0268 TOTALS		41.60
01-0715	CLEAN UNIFORM COMPANY	I-20151332	502 4422.01-4409.00 Other Rentals/Leases	Uniforms - WTP	103598 7/29/2020	42.94
				VENDOR 01-0715 TOTALS		42.94
01-1886	WALTERS-MORGAN	I-01-002040	502 4422.01-4318.00 R&M:Utility Operating Equip,	Labor @ WTP PO: 20-0059	103650 7/29/2020	4,585.99
				VENDOR 01-1886 TOTALS		4,585.99
01-2254	CENTURY BUSINESS TECHN	I-562720	502 4422.01-4409.00 Other Rentals/Leases	WTP Copier	103595 7/29/2020	110.58
				VENDOR 01-2254 TOTALS		110.58
01-2610	AIRGAS USA, LLC	I-9103025560	502 4422.01-5702.00 Freight Charges	UPS	103585 7/29/2020	18.41
				VENDOR 01-2610 TOTALS		18.41

DEPARTMENT 422 WATER TREATMENT PLANT TOTAL: 5,600.02

VENDOR SET: 01 CITY OF CHANUTE
FUND : 502 WATER UTILITY
DEPARTMENT: 423 WATER TRANSMISSION/DISTR
INVOICE DATE RANGE: 1/01/1998 THRU 99/99/9999
PAY DATE RANGE: 7/29/2020 THRU 7/29/2020
BUDGET TO USE: CB-CURRENT BUDGET

VENDOR	NAME	ITEM #	G/L ACCOUNT ACCT NAME	DESCRIPTION	CHECK # CHECK DATE	AMOUNT
01-0089	CLEAVERS FARM SUPPLY	I-2007-639937	502 4423.01-6525.00 Fittings	Adapter/Plug/Tee	103599 7/29/2020	26.34
				VENDOR 01-0089 TOTALS		26.34
01-0186	JAYHAWK LUMBER & RENTA	I-352731	502 4423.01-6705.00 Machinery and Equipment Repair	Auger Rental	103614 7/29/2020	25.00
				VENDOR 01-0186 TOTALS		25.00
01-0269	OIL PATCH PUMP & SUPPL	I-192244	502 4423.01-6525.00 Fittings	Tee/Elbow/Bushings	103629 7/29/2020	83.95
				VENDOR 01-0269 TOTALS		83.95
01-0715	CLEAN UNIFORM COMPANY	I-20151326	502 4423.01-4409.00 Other Rentals/Leases	Uniforms - Water	103598 7/29/2020	36.30
				VENDOR 01-0715 TOTALS		36.30
01-3757	OLATHE WINWATER WORKS	I-151530 00	502 4423.01-6578.00 Water Supplies & Materials	Clamp	103630 7/29/2020	463.00
				VENDOR 01-3757 TOTALS		463.00

DEPARTMENT 423 WATER TRANSMISSION/DISTR TOTAL: 634.59

VENDOR SET 502 WATER UTILITY TOTAL: 9,263.81

VENDOR SET: 01 CITY OF CHANUTE
BANK: AP
FUND : 503 GAS UTILITY
DEPARTMENT: 434 GAS DISTRIBUTION
INVOICE DATE RANGE: 1/01/1998 THRU 99/99/9999
PAY DATE RANGE: 7/29/2020 THRU 7/29/2020
BUDGET TO USE: CB-CURRENT BUDGET

VENDOR	NAME	ITEM #	G/L ACCOUNT ACCT NAME	DESCRIPTION	CHECK # CHECK DATE	AMOUNT
01-0131	FASTENAL COMPANY	I-KSCHA102078	503 4434.02-6548.00 Painting Supplies	Marking Paint	103604 7/29/2020	314.57
				VENDOR 01-0131 TOTALS		314.57
01-0715	CLEAN UNIFORM COMPANY	I-20151325	503 4434.02-6507.00 Clothing - Protective	Uniforms - Gas	103598 7/29/2020	113.44
				VENDOR 01-0715 TOTALS		113.44
01-3360	MONTY BAILEY	I-07232020	503 4434.02-5704.00 Meeting Expense (Out-of-Town)	Inspection Odorant System	103590 7/29/2020	182.75
				VENDOR 01-3360 TOTALS		182.75
				DEPARTMENT 434 GAS DISTRIBUTION	TOTAL:	610.76
				VENDOR SET 503 GAS UTILITY	TOTAL:	610.76

VENDOR SET: 01 CITY OF CHANUTE
FUND : 504 REFUSE UTILITY
DEPARTMENT: 441 REFUSE UTILITY DEPARTMENT
INVOICE DATE RANGE: 1/01/1998 THRU 99/99/9999
PAY DATE RANGE: 7/29/2020 THRU 7/29/2020
BUDGET TO USE: CB-CURRENT BUDGET

VENDOR	NAME	ITEM #	G/L ACCOUNT ACCT NAME	DESCRIPTION	CHECK # CHECK DATE	AMOUNT
01-0089	CLEAVERS FARM SUPPLY	I-2007-639534	504 4441.00-6599.00 Miscellaneous Operating Suppli	Scoop	103599 7/29/2020	32.39
				VENDOR 01-0089 TOTALS		32.39
01-0715	CLEAN UNIFORM COMPANY	I-20151331	504 4441.00-4409.00 Other Rentals/Leases	Uniforms - Sanitation	103598 7/29/2020	23.78
				VENDOR 01-0715 TOTALS		23.78
				DEPARTMENT 441 REFUSE UTILITY DEPARTMENTTOTAL:		56.17

VENDOR SET: 01 CITY OF CHANUTE
FUND : 504 REFUSE UTILITY
DEPARTMENT: 442 REFUSE LANDFILL
INVOICE DATE RANGE: 1/01/1998 THRU 99/99/9999
PAY DATE RANGE: 7/29/2020 THRU 7/29/2020
BUDGET TO USE: CB-CURRENT BUDGET

BANK: AP

VENDOR	NAME	ITEM #	G/L ACCOUNT ACCT NAME	DESCRIPTION	CHECK # CHECK DATE	AMOUNT
01-0089	CLEAVERS FARM SUPPLY	I-2007-638777	504 4442.00-6506.00 Chemicals	Drain Operner	103599 7/29/2020	8.09
01-0089	CLEAVERS FARM SUPPLY	I-2007-638880	504 4442.00-6699.00 Misc Building & Construction	Angle Iron	103599 7/29/2020	3.32
01-0089	CLEAVERS FARM SUPPLY	I-2007-639618	504 4442.00-6565.00 Small Tools & Apparatus	Sprayer	103599 7/29/2020	17.99
01-0089	CLEAVERS FARM SUPPLY	I-2007-642328	504 4442.00-6705.00 Machinery and Equipment Repair	Bolts	103599 7/29/2020	2.30
				VENDOR 01-0089	TOTALS	31.70
01-0267	O'BRIEN ROCK CO., INC.	I-83396	504 4442.00-6699.00 Misc Building & Construction	Concrete - Drain Repair	103627 7/29/2020	227.25
				VENDOR 01-0267	TOTALS	227.25
01-0391	CRANSTON MACHINE CO.,	I-62178	504 4442.00-6705.00 Machinery and Equipment Repair	Baler Parts	103603 7/29/2020	920.44
01-0391	CRANSTON MACHINE CO.,	I-62183	504 4442.00-6705.00 Machinery and Equipment Repair	Baler Parts	103603 7/29/2020	135.75
				VENDOR 01-0391	TOTALS	1,056.19
01-0715	CLEAN UNIFORM COMPANY	I-20151331	504 4442.00-4409.00 Other Rentals/Leases	Uniforms - Landfill	103598 7/29/2020	7.72
				VENDOR 01-0715	TOTALS	7.72
01-2196	CHANDLER OIL, LLC	I-60281	504 4442.00-6201.00 Diesel Fuel	DSL @ Landfill	103596 7/29/2020	452.88
				VENDOR 01-2196	TOTALS	452.88
01-3905	FOLEY EQUIPMENT CO.	I-SS210022208	504 4442.00-6705.00 Machinery and Equipment Repair	Install Bucket #141	103605 7/29/2020	732.62
				VENDOR 01-3905	TOTALS	732.62

DEPARTMENT 442 REFUSE LANDFILL TOTAL: 2,508.36

VENDOR SET 504 REFUSE UTILITY TOTAL: 2,564.53

VENDOR SET: 01 CITY OF CHANUTE
FUND : 505 SEWER UTILITY
DEPARTMENT: 451 SEWER COLLECTION
INVOICE DATE RANGE: 1/01/1998 THRU 99/99/9999
PAY DATE RANGE: 7/29/2020 THRU 7/29/2020
BUDGET TO USE: CB-CURRENT BUDGET

VENDOR	NAME	ITEM #	G/L ACCOUNT ACCT NAME	DESCRIPTION	CHECK # CHECK DATE	AMOUNT
01-0229	LOCKE SUPPLY COMPANY	I-40755268-00	505 4451.01-6525.00 Fittings	Pipe	103619 7/29/2020	81.52
				VENDOR 01-0229 TOTALS		81.52
01-0715	CLEAN UNIFORM COMPANY	I-20151326	505 4451.01-4409.00 Other Rentals/Leases	Uniforms - WWC	103598 7/29/2020	15.40
				VENDOR 01-0715 TOTALS		15.40
				DEPARTMENT 451 SEWER COLLECTION	TOTAL:	96.92

VENDOR SET: 01 CITY OF CHANUTE BANK: AP
FUND : 505 SEWER UTILITY
DEPARTMENT: 453 SEWER TREATMENT/DISPOSAL
INVOICE DATE RANGE: 1/01/1998 THRU 99/99/9999
PAY DATE RANGE: 7/29/2020 THRU 7/29/2020
BUDGET TO USE: CB-CURRENT BUDGET

VENDOR	NAME	ITEM #	G/L ACCOUNT ACCT NAME	DESCRIPTION	CHECK # CHECK DATE	AMOUNT
01-0268	O'REILLY AUTOMOTIVE ST	I-0136-470591	505 4453.01-6599.00 Miscellaneous Operating Suppli	Tire Gauge	103628 7/29/2020	8.57
01-0268	O'REILLY AUTOMOTIVE ST	I-0136-472085	505 4453.01-6599.00 Miscellaneous Operating Suppli	Radio Capr	103628 7/29/2020	17.93
				VENDOR 01-0268 TOTALS		26.50
01-0715	CLEAN UNIFORM COMPANY	I-20151333	505 4453.01-4409.00 Other Rentals/Leases	Uniforms - WWTP	103598 7/29/2020	60.66
				VENDOR 01-0715 TOTALS		60.66
01-1107	INDUSTRIAL IRRIGATION	I-I0322800	505 4453.01-6705.00 Machinery and Equipment Repair	Carb	103612 7/29/2020	291.94
				VENDOR 01-1107 TOTALS		291.94
01-2079	PACE ANALYTICAL SERVIC	I-2060109983	505 4453.01-3217.00 Laboratory Services	Lab Testing - Weekly	103631 7/29/2020	227.00
				VENDOR 01-2079 TOTALS		227.00
01-2684	BUMPER TO BUMPER	I-1557265	505 4453.01-6599.00 Miscellaneous Operating Suppli	Wiper Blades/Anti-Freeze #504	103593 7/29/2020	35.64
				VENDOR 01-2684 TOTALS		35.64
01-4961	FRED'S TREADS CHANUTE	I-106699	505 4453.01-6599.00 Miscellaneous Operating Suppli	Flat Repair #504	103606 7/29/2020	15.00
				VENDOR 01-4961 TOTALS		15.00

DEPARTMENT 453 SEWER TREATMENT/DISPOSAL TOTAL: 656.74

VENDOR SET: 01 CITY OF CHANUTE
FUND : 505 SEWER UTILITY
DEPARTMENT: 456 STORM DRAINAGE
INVOICE DATE RANGE: 1/01/1998 THRU 99/99/9999
PAY DATE RANGE: 7/29/2020 THRU 7/29/2020
BUDGET TO USE: CB-CURRENT BUDGET

VENDOR	NAME	ITEM #	G/L ACCOUNT ACCT NAME	DESCRIPTION	CHECK # CHECK DATE	AMOUNT
01-4057	WILSON AND COMPANY	I-91427	505 4456.00-3214.00 Engineering Services	Drainage Ditch Task Order	103653 7/29/2020	133.82
				VENDOR 01-4057 TOTALS		133.82
			DEPARTMENT 456	STORM DRAINAGE	TOTAL:	133.82
			VENDOR SET 505	SEWER UTILITY	TOTAL:	887.48

VENDOR SET: 01 CITY OF CHANUTE BANK: AP
FUND : 506 FIBER/COMMUNICATION
DEPARTMENT: 415 FIBER COMMUNICATIONS
INVOICE DATE RANGE: 1/01/1998 THRU 99/99/9999
PAY DATE RANGE: 7/29/2020 THRU 7/29/2020
BUDGET TO USE: CB-CURRENT BUDGET

VENDOR	NAME	ITEM #	G/L ACCOUNT ACCT NAME	DESCRIPTION	CHECK # CHECK DATE	AMOUNT
01-0131	FASTENAL COMPANY	I-KSCHA102027	506 4415.00-6532.00 Hardware	Screws	103604 7/29/2020	74.46
01-0131	FASTENAL COMPANY	I-KSCHA102072	506 4415.00-6565.00 Small Tools & Apparatus	Jobber Drill Set	103604 7/29/2020	77.60
				VENDOR 01-0131 TOTALS		152.06
01-2160	BERNIE ELECTRIC WHOLES	I-S100078357.001	506 4415.00-6514.00 Electrical Supplies	Wire for Power Connections	103592 7/29/2020	200.51
				VENDOR 01-2160 TOTALS		200.51
01-4468	COX COMMUNICATIONS	I-06242020	506 4415.00-5211.00 Telephone Services	Erie Cable Internet Connection	103602 7/29/2020	651.82
				VENDOR 01-4468 TOTALS		651.82

DEPARTMENT 415 FIBER COMMUNICATIONS TOTAL: 1,004.39

VENDOR SET 506 FIBER/COMMUNICATION TOTAL: 1,004.39

VENDOR SET: 01 CITY OF CHANUTE
FUND : 601 VEHICLE SERVICES
DEPARTMENT: 811 VEHICLE SERVICES SHOP
INVOICE DATE RANGE: 1/01/1998 THRU 99/99/9999
PAY DATE RANGE: 7/29/2020 THRU 7/29/2020
BUDGET TO USE: CB-CURRENT BUDGET

VENDOR	NAME	ITEM #	G/L ACCOUNT ACCT NAME	DESCRIPTION	CHECK # CHECK DATE	AMOUNT
01-0131	FASTENAL COMPANY	I-KSCHA101721	601 4811.00-6705.00 Machinery and Equipment Repair	Screws/Nuts #248	103604 7/29/2020	23.56
01-0131	FASTENAL COMPANY	I-KSCHA101760	601 4811.00-6707.00 Motor Vehicle Parts	Screws/Nuts/Cap #361	103604 7/29/2020	27.50
01-0131	FASTENAL COMPANY	I-KSCHA101770	601 4811.00-6707.00 Motor Vehicle Parts	Screws/Washers	103604 7/29/2020	17.16
01-0131	FASTENAL COMPANY	I-KSCHA101782	601 4811.00-6705.00 Machinery and Equipment Repair	Stock	103604 7/29/2020	35.73
01-0131	FASTENAL COMPANY	I-KSCHA101797	601 4811.00-6707.00 Motor Vehicle Parts	Bit #361	103604 7/29/2020	9.20
				VENDOR 01-0131	TOTALS	113.15
01-0173	IBT INC.	I-7680054	601 4811.00-6107.00 Small Items of Equipment	Dixons	103611 7/29/2020	128.73
				VENDOR 01-0173	TOTALS	128.73
01-0182	INTERSTATE BATTERY SYS	I-100106674	601 4811.00-6107.00 Small Items of Equipment	Batteries	103613 7/29/2020	39.97
				VENDOR 01-0182	TOTALS	39.97
01-0268	O'REILLY AUTOMOTIVE ST	C-0136-470257	601 4811.00-6707.00 Motor Vehicle Parts	Return #183	103628 7/29/2020	52.58-
01-0268	O'REILLY AUTOMOTIVE ST	I-0136-467528	601 4811.00-6707.00 Motor Vehicle Parts	Heater Core #227	103628 7/29/2020	72.41
01-0268	O'REILLY AUTOMOTIVE ST	I-0136-468370	601 4811.00-6707.00 Motor Vehicle Parts	Valve Core - Stock	103628 7/29/2020	0.84
01-0268	O'REILLY AUTOMOTIVE ST	I-0136-468373	601 4811.00-6707.00 Motor Vehicle Parts	Valve Cores - Stock	103628 7/29/2020	17.03
01-0268	O'REILLY AUTOMOTIVE ST	I-0136-469714	601 4811.00-6107.00 Small Items of Equipment	Absorbent	103628 7/29/2020	41.96
01-0268	O'REILLY AUTOMOTIVE ST	I-0136-469896	601 4811.00-6705.00 Machinery and Equipment Repair	Tap #257	103628 7/29/2020	2.29
01-0268	O'REILLY AUTOMOTIVE ST	I-0136-469959	601 4811.00-6705.00 Machinery and Equipment Repair	Freeon	103628 7/29/2020	64.99
01-0268	O'REILLY AUTOMOTIVE ST	I-0136-469959	601 4811.00-6707.00 Motor Vehicle Parts	Freeon	103628 7/29/2020	65.00
01-0268	O'REILLY AUTOMOTIVE ST	I-0136-470244	601 4811.00-6707.00 Motor Vehicle Parts	Parts #183	103628 7/29/2020	398.62
01-0268	O'REILLY AUTOMOTIVE ST	I-0136-471425	601 4811.00-6707.00 Motor Vehicle Parts	Brake Pads/Rotors #364	103628 7/29/2020	353.00

VENDOR SET: 01 CITY OF CHANUTE
FUND : 601 VEHICLE SERVICES
DEPARTMENT: 811 VEHICLE SERVICES SHOP
INVOICE DATE RANGE: 1/01/1998 THRU 99/99/9999
PAY DATE RANGE: 7/29/2020 THRU 7/29/2020
BUDGET TO USE: CB-CURRENT BUDGET

BANK: AP

VENDOR	NAME	ITEM #	G/L ACCOUNT ACCT NAME	DESCRIPTION	CHECK # CHECK DATE	AMOUNT
01-0268	O'REILLY AUTOMOTIVE ST	I-0136-471482	601 4811.00-6707.00 Motor Vehicle Parts	Filter #364	103628 7/29/2020	6.77
				VENDOR 01-0268 TOTALS		970.33
01-0447	SHIELDS MOTOR CO., INC	I-135634	601 4811.00-6707.00 Motor Vehicle Parts	Rotors/Pads #366	103640 7/29/2020	796.50
01-0447	SHIELDS MOTOR CO., INC	I-94143	601 4811.00-4311.00 R&M:Motor Vehicle	Labor #255	103640 7/29/2020	330.00
01-0447	SHIELDS MOTOR CO., INC	I-94143	601 4811.00-6707.00 Motor Vehicle Parts	Parts #255	103640 7/29/2020	687.00
				VENDOR 01-0447 TOTALS		1,813.50
01-0709	MERLE KELLY FORD	I-65787	601 4811.00-6707.00 Motor Vehicle Parts	Filter/Relay	103622 7/29/2020	90.20
				VENDOR 01-0709 TOTALS		90.20
01-0715	CLEAN UNIFORM COMPANY	I-20151328	601 4811.00-4409.00 Other Rentals/Leases	Uniforms - Veh Services	103598 7/29/2020	17.82
				VENDOR 01-0715 TOTALS		17.82
01-2188	LARUE MACHINE INC.	I-10837	601 4811.00-6705.00 Machinery and Equipment Repair	Shaft #351	103618 7/29/2020	170.00
				VENDOR 01-2188 TOTALS		170.00
01-2196	CHANDLER OIL, LLC	I-123516	601 4811.00-6704.00 Lubricants (Grease, Oil, Etc.)	DEF	103596 7/29/2020	128.00
01-2196	CHANDLER OIL, LLC	I-123553	601 4811.00-6704.00 Lubricants (Grease, Oil, Etc.)	ATF	103596 7/29/2020	190.43
01-2196	CHANDLER OIL, LLC	I-60278	601 4811.00-6201.00 Diesel Fuel	700 gals Diesel @ Complex PO: 20-0019	103596 7/29/2020	1,745.10
				VENDOR 01-2196 TOTALS		2,063.53
01-2684	BUMPER TO BUMPER	I-1556021	601 4811.00-6705.00 Machinery and Equipment Repair	Coupler	103593 7/29/2020	2.83

VENDOR SET: 01 CITY OF CHANUTE
FUND : 601 VEHICLE SERVICES
DEPARTMENT: 811 VEHICLE SERVICES SHOP
INVOICE DATE RANGE: 1/01/1998 THRU 99/99/9999
PAY DATE RANGE: 7/29/2020 THRU 7/29/2020
BUDGET TO USE: CB-CURRENT BUDGET
BANK: AP

VENDOR	NAME	ITEM #	G/L ACCOUNT ACCT NAME	DESCRIPTION	CHECK # CHECK DATE	AMOUNT
01-2684	BUMPER TO BUMPER	I-1556096	601 4811.00-6707.00 Motor Vehicle Parts	Bit #361	103593 7/29/2020	11.25
01-2684	BUMPER TO BUMPER	I-1556149	601 4811.00-6707.00 Motor Vehicle Parts	Filter #72	103593 7/29/2020	10.93
01-2684	BUMPER TO BUMPER	I-1556833	601 4811.00-6707.00 Motor Vehicle Parts	Filter #380	103593 7/29/2020	4.85
01-2684	BUMPER TO BUMPER	I-1556834	601 4811.00-6705.00 Machinery and Equipment Repair	Plugs #248	103593 7/29/2020	17.18
01-2684	BUMPER TO BUMPER	I-1556835	601 4811.00-6107.00 Small Items of Equipment	Chuck/Nipple	103593 7/29/2020	16.63
01-2684	BUMPER TO BUMPER	I-1556835	601 4811.00-6702.00 Cleaning Materials - Solvents,	Floor Sweepq	103593 7/29/2020	39.48
01-2684	BUMPER TO BUMPER	I-1557043	601 4811.00-6707.00 Motor Vehicle Parts	Filter #378	103593 7/29/2020	5.08
01-2684	BUMPER TO BUMPER	I-1557440	601 4811.00-6707.00 Motor Vehicle Parts	Filter #338	103593 7/29/2020	14.57
				VENDOR 01-2684	TOTALS	122.80
01-3608	SUMMIT TRUCK GROUP	I-150166246	601 4811.00-6707.00 Motor Vehicle Parts	Parts #361	103645 7/29/2020	3,420.56
01-3608	SUMMIT TRUCK GROUP	I-150167140	601 4811.00-6707.00 Motor Vehicle Parts	Tube/O-Ring #361	103645 7/29/2020	164.44
01-3608	SUMMIT TRUCK GROUP	I-150167448	601 4811.00-6707.00 Motor Vehicle Parts	Cylinder/Switch #361	103645 7/29/2020	193.05
				VENDOR 01-3608	TOTALS	3,778.05
01-3905	FOLEY EQUIPMENT CO.	I-PS210071748	601 4811.00-6705.00 Machinery and Equipment Repair	Links #23	103605 7/29/2020	131.10
01-3905	FOLEY EQUIPMENT CO.	I-PS210072195	601 4811.00-6705.00 Machinery and Equipment Repair	Handle #39	103605 7/29/2020	54.12
01-3905	FOLEY EQUIPMENT CO.	I-PS210072633	601 4811.00-6705.00 Machinery and Equipment Repair	Batteries #198	103605 7/29/2020	543.82
				VENDOR 01-3905	TOTALS	729.04
01-4001	LANG DIESEL, INC	I-P18895	601 4811.00-6705.00 Machinery and Equipment Repair	Parts #890	103617 7/29/2020	46.02
				VENDOR 01-4001	TOTALS	46.02

VENDOR SET: 01 CITY OF CHANUTE BANK: AP
FUND : 601 VEHICLE SERVICES
DEPARTMENT: 811 VEHICLE SERVICES SHOP
INVOICE DATE RANGE: 1/01/1998 THRU 99/99/9999
PAY DATE RANGE: 7/29/2020 THRU 7/29/2020
BUDGET TO USE: CB-CURRENT BUDGET

VENDOR	NAME	ITEM #	G/L ACCOUNT ACCT NAME	DESCRIPTION	CHECK # CHECK DATE	AMOUNT
01-4190	MRH INSURANCE GROUP, I	I-189930	601 4811.00-5104.00 General Liability Insurance	UST Liability Insurance	103626 7/29/2020	432.00
				VENDOR 01-4190 TOTALS		432.00
01-4262	RED MUNICIPAL & INDUST	C-13688	601 4811.00-6705.00 Machinery and Equipment Repair	Credit #360	103636 7/29/2020	166.18-
01-4262	RED MUNICIPAL & INDUST	I-13654	601 4811.00-6705.00 Machinery and Equipment Repair	Steering Ball #360	103636 7/29/2020	166.18
01-4262	RED MUNICIPAL & INDUST	I-13680	601 4811.00-6705.00 Machinery and Equipment Repair	Va;veBar #360	103636 7/29/2020	780.22
01-4262	RED MUNICIPAL & INDUST	I-13689	601 4811.00-6705.00 Machinery and Equipment Repair	Ball Joint #360	103636 7/29/2020	84.69
01-4262	RED MUNICIPAL & INDUST	I-13699	601 4811.00-6705.00 Machinery and Equipment Repair	Relay #360	103636 7/29/2020	35.66
				VENDOR 01-4262 TOTALS		900.57
01-5046	WESTSIDE TIRE AND AUTO	I-23055	601 4811.00-6714.00 Tires, Tubes, Etc.	2 Tires #60	103652 7/29/2020	810.50
01-5046	WESTSIDE TIRE AND AUTO	I-23097	601 4811.00-4311.00 R&M:Motor Vehicle	Flat Repair #500	103652 7/29/2020	12.00
				VENDOR 01-5046 TOTALS		822.50

DEPARTMENT 811 VEHICLE SERVICES SHOP TOTAL: 12,238.21

VENDOR SET 601 VEHICLE SERVICES TOTAL: 12,238.21

VENDOR SET: 01 CITY OF CHANUTE
FUND : 602 UTILITY SERVICES
DEPARTMENT: 821 UTILITY ADMIN SERVICE
INVOICE DATE RANGE: 1/01/1998 THRU 99/99/9999
PAY DATE RANGE: 7/29/2020 THRU 7/29/2020
BUDGET TO USE: CB-CURRENT BUDGET

VENDOR	NAME	ITEM #	G/L ACCOUNT ACCT NAME	DESCRIPTION	CHECK # CHECK DATE	AMOUNT
01-2564	RESERVE ACCOUNT	I-07-2020	602 4821.00-5208.00 Postage	Postage	103637 7/29/2020	1,000.00
				VENDOR 01-2564 TOTALS		1,000.00
				DEPARTMENT 821 UTILITY ADMIN SERVICE TOTAL:		1,000.00

VENDOR SET: 01 CITY OF CHANUTE BANK: AP
FUND : 602 UTILITY SERVICES
DEPARTMENT: 822 UTILITY BUSINESS OFFICE
INVOICE DATE RANGE: 1/01/1998 THRU 99/99/9999
PAY DATE RANGE: 7/29/2020 THRU 7/29/2020
BUDGET TO USE: CB-CURRENT BUDGET

VENDOR	NAME	ITEM #	G/L ACCOUNT ACCT NAME	DESCRIPTION	CHECK # CHECK DATE	AMOUNT
01-0278	PETTY CASH	I-9364	602 4822.00-5208.00 Postage	Postage - 4th Ward	103633 7/29/2020	371.21
01-0278	PETTY CASH	I-9371	602 4822.00-5208.00 Postage	Postage - 1st & 2nd Ward	103633 7/29/2020	410.29
01-0278	PETTY CASH	I-9373	602 4822.00-5208.00 Postage	Postage - 5th Ward	103633 7/29/2020	432.08
				VENDOR 01-0278 TOTALS		1,213.58
01-2564	RESERVE ACCOUNT	I-07-2020	602 4822.00-5208.00 Postage	Postage	103637 7/29/2020	1,000.00
				VENDOR 01-2564 TOTALS		1,000.00
				DEPARTMENT 822 UTILITY BUSINESS OFFICE TOTAL:		2,213.58

VENDOR SET: 01 CITY OF CHANUTE
FUND : 602 UTILITY SERVICES
DEPARTMENT: 823 DATA PROCESSING
INVOICE DATE RANGE: 1/01/1998 THRU 99/99/9999
PAY DATE RANGE: 7/29/2020 THRU 7/29/2020
BUDGET TO USE: CB-CURRENT BUDGET

VENDOR	NAME	ITEM #	G/L ACCOUNT ACCT NAME	DESCRIPTION	CHECK # CHECK DATE	AMOUNT
01-5283	AMAZON CAPITAL SERVICE	I-1N9H-JYKJ-73W1	602 4823.00-6102.00 Computer Supplies	Adaptors for CPU to Monitors	103586 7/29/2020	28.18
				VENDOR 01-5283 TOTALS		28.18
				DEPARTMENT 823 DATA PROCESSING	TOTAL:	28.18

VENDOR SET: 01 CITY OF CHANUTE
FUND : 602 UTILITY SERVICES
DEPARTMENT: 825 INFORMATION SERVICE
INVOICE DATE RANGE: 1/01/1998 THRU 99/99/9999
PAY DATE RANGE: 7/29/2020 THRU 7/29/2020
BUDGET TO USE: CB-CURRENT BUDGET

VENDOR	NAME	ITEM #	G/L ACCOUNT ACCT NAME	DESCRIPTION	CHECK # CHECK DATE	AMOUNT
01-4385	SPARKLIGHT	I-07-20 Mem Bldg	602 4825.00-3299.00 Other Professional Services	Digital Devices Rental	103641 7/29/2020	4.51
				VENDOR 01-4385 TOTALS		4.51
				DEPARTMENT 825 INFORMATION SERVICE	TOTAL:	4.51
				VENDOR SET 602 UTILITY SERVICES	TOTAL:	3,246.27

VENDOR SET: 01 CITY OF CHANUTE
FUND : 603 PUBLIC WORKS & COMPLEX
DEPARTMENT: 831 PUBLIC WORKS/COMPLEX
INVOICE DATE RANGE: 1/01/1998 THRU 99/99/9999
PAY DATE RANGE: 7/29/2020 THRU 7/29/2020
BUDGET TO USE: CB-CURRENT BUDGET

VENDOR	NAME	ITEM #	G/L ACCOUNT ACCT NAME	DESCRIPTION	CHECK # CHECK DATE	AMOUNT
01-0411	HUGO'S INDUSTRIAL SUPP	I-243161	603 4831.00-6101.00 Office Supplies	Office Supplies	103610 7/29/2020	15.03
				VENDOR 01-0411 TOTALS		15.03
				DEPARTMENT 831 PUBLIC WORKS/COMPLEX	TOTAL:	15.03
				VENDOR SET 603 PUBLIC WORKS & COMPLEX	TOTAL:	15.03

VENDOR SET: 01 CITY OF CHANUTE BANK: AP
FUND : 735 EFFICIENCY KANSAS
DEPARTMENT: 735 Efficiency Kansas
INVOICE DATE RANGE: 1/01/1998 THRU 99/99/9999
PAY DATE RANGE: 7/29/2020 THRU 7/29/2020
BUDGET TO USE: CB-CURRENT BUDGET

VENDOR	NAME	ITEM #	G/L ACCOUNT ACCT NAME	DESCRIPTION	CHECK # CHECK DATE	AMOUNT
01-4999	KCC	I-07-2020	735 4735.00-7802.00 Customer Loan Pmts-EnergyTrax	108 N Evergreen	103615 7/29/2020	30.00
	PROJ: 751-12-00600	EFFICIENCY KANSAS LOANS		108 N. Evergreen, 2012-00600		
01-4999	KCC	I-07-2020	735 4735.00-7803.00 Service Fee - State	108 N Evergreen	103615 7/29/2020	2.00
	PROJ: 751-12-00600	EFFICIENCY KANSAS LOANS		108 N. Evergreen, 2012-00600		
01-4999	KCC	I-07-2020	735 4735.00-7802.00 Customer Loan Pmts-EnergyTrax	704 W Main	103615 7/29/2020	81.16
	PROJ: 751-11-00567	EFFICIENCY KANSAS LOANS		704 W. Main, 2011-00567		
01-4999	KCC	I-07-2020	735 4735.00-7803.00 Service Fee - State	704 W Main	103615 7/29/2020	2.00
	PROJ: 751-11-00567	EFFICIENCY KANSAS LOANS		704 W. Main, 2011-00567		
01-4999	KCC	I-07-2020	735 4735.00-7802.00 Customer Loan Pmts-EnergyTrax	810 W Main	103615 7/29/2020	91.75
	PROJ: 751-11-00116	EFFICIENCY KANSAS LOANS		810 W. Main, 2011-00116		
01-4999	KCC	I-07-2020	735 4735.00-7803.00 Service Fee - State	810 W Main	103615 7/29/2020	2.00
	PROJ: 751-11-00116	EFFICIENCY KANSAS LOANS		810 W. Main, 2011-00116		
01-4999	KCC	I-07-2020	735 4735.00-7802.00 Customer Loan Pmts-EnergyTrax	109 N Forest	103615 7/29/2020	69.26
	PROJ: 751-12-00698	EFFICIENCY KANSAS LOANS		109 N. Forest, 2012-00698		
01-4999	KCC	I-07-2020	735 4735.00-7803.00 Service Fee - State	109 N Forest	103615 7/29/2020	2.00
	PROJ: 751-12-00698	EFFICIENCY KANSAS LOANS		109 N. Forest, 2012-00698		
01-4999	KCC	I-07-2020	735 4735.00-7802.00 Customer Loan Pmts-EnergyTrax	814 W Elm	103615 7/29/2020	46.63
	PROJ: 751-11-00200	EFFICIENCY KANSAS LOANS		814 W. Elm, 2011-00200		
01-4999	KCC	I-07-2020	735 4735.00-7803.00 Service Fee - State	814 W Elm	103615 7/29/2020	2.00
	PROJ: 751-11-00200	EFFICIENCY KANSAS LOANS		814 W. Elm, 2011-00200		
01-4999	KCC	I-07-2020	735 4735.00-7802.00 Customer Loan Pmts-EnergyTrax	21640 Harper Rd	103615 7/29/2020	54.36
	PROJ: 751-11-00233	EFFICIENCY KANSAS LOANS		21640 Harper Rd, 2011-00233		
01-4999	KCC	I-07-2020	735 4735.00-7803.00 Service Fee - State	21640 Harper Rd	103615 7/29/2020	2.00
	PROJ: 751-11-00233	EFFICIENCY KANSAS LOANS		21640 Harper Rd, 2011-00233		
01-4999	KCC	I-07-2020	735 4735.00-7802.00 Customer Loan Pmts-EnergyTrax	1102 N Kansas	103615 7/29/2020	53.70
	PROJ: 751-11-00249	EFFICIENCY KANSAS LOANS		1102 N. Kansas, 2011-00249		
01-4999	KCC	I-07-2020	735 4735.00-7803.00 Service Fee - State	1102 N Kansas	103615 7/29/2020	2.00
	PROJ: 751-11-00249	EFFICIENCY KANSAS LOANS		1102 N. Kansas, 2011-00249		
01-4999	KCC	I-07-2020	735 4735.00-7802.00 Customer Loan Pmts-EnergyTrax	409 S Santa Fe	103615 7/29/2020	40.26
	PROJ: 751-12-00643	EFFICIENCY KANSAS LOANS		409 S. Santa Fe, 2012-00643		

VENDOR SET: 01 CITY OF CHANUTE
FUND : 735 EFFICIENCY KANSAS
DEPARTMENT: 735 Efficiency Kansas
INVOICE DATE RANGE: 1/01/1998 THRU 99/99/9999
PAY DATE RANGE: 7/29/2020 THRU 7/29/2020
BUDGET TO USE: CB-CURRENT BUDGET

VENDOR	NAME	ITEM #	G/L ACCOUNT ACCT NAME	DESCRIPTION	CHECK # CHECK DATE	AMOUNT
01-4999	KCC	I-07-2020	735 4735.00-7803.00 Service Fee - State	409 S Santa Fe	103615 7/29/2020	2.00
	PROJ: 751-12-00643	EFFICIENCY KANSAS LOANS		409 S. Santa Fe, 2012-00643		
01-4999	KCC	I-07-2020	735 4735.00-7802.00 Customer Loan Pmts-EnergyTrax	924 Windsor Rd	103615 7/29/2020	48.75
	PROJ: 751-11-00185	EFFICIENCY KANSAS LOANS		924 Windsor, 2011-00185		
01-4999	KCC	I-07-2020	735 4735.00-7803.00 Service Fee - State	924 Windsor Rd	103615 7/29/2020	2.00
	PROJ: 751-11-00185	EFFICIENCY KANSAS LOANS		924 Windsor, 2011-00185		
01-4999	KCC	I-07-2020	735 4735.00-7802.00 Customer Loan Pmts-EnergyTrax	17700 Elk Rd	103615 7/29/2020	38.89
	PROJ: 751-12-00615	EFFICIENCY KANSAS LOANS		17700 Elk Rd, 2012-00615		
01-4999	KCC	I-07-2020	735 4735.00-7803.00 Service Fee - State	17700 Elk Rd	103615 7/29/2020	2.00
	PROJ: 751-12-00615	EFFICIENCY KANSAS LOANS		17700 Elk Rd, 2012-00615		

VENDOR 01-4999 TOTALS 574.76

DEPARTMENT 735 Efficiency Kansas TOTAL: 574.76

VENDOR SET 735 EFFICIENCY KANSAS TOTAL: 574.76

VENDOR SET: 01 CITY OF CHANUTE
FUND : 742 LAW ENFORCEMNT FORFEITURE
DEPARTMENT: 211 POLICE
INVOICE DATE RANGE: 1/01/1998 THRU 99/99/9999
PAY DATE RANGE: 7/29/2020 THRU 7/29/2020
BUDGET TO USE: CB-CURRENT BUDGET

VENDOR	NAME	ITEM #	G/L ACCOUNT ACCT NAME	DESCRIPTION	CHECK # CHECK DATE	AMOUNT
01-0278	PETTY CASH	I-9365	742 4211.00-6555.02 Forfeiture Expense	PD Title/Reg Fees	103633 7/29/2020	40.00
				VENDOR 01-0278 TOTALS		40.00
				DEPARTMENT 211 POLICE	TOTAL:	40.00
				VENDOR SET 742 LAW ENFORCEMNT FORFEITURE	TOTAL:	40.00
					REPORT GRAND TOTAL:	186,143.61

VENDOR SET: 01 CITY OF CHANUTE
BANK: AP
FUND : 101 GENERAL
DEPARTMENT: 111 CITY COMMISSION
INVOICE DATE RANGE: 1/01/1998 THRU 99/99/9999
PAY DATE RANGE: 8/03/2020 THRU 8/05/2020
BUDGET TO USE: CB-CURRENT BUDGET

VENDOR	NAME	ITEM #	G/L ACCOUNT	NAME	DESCRIPTION	CHECK #	AMOUNT
01-3904	VERIZON WIRELESS	I-9858893537	101 4111.00-5211.00	Telephone Ser:	Cell Phones	103723	160.04
					VENDOR 01-3904 TOTALS		160.04
				DEPARTMENT 111	CITY COMMISSION	TOTAL:	160.04

VENDOR SET: 01 CITY OF CHANUTE
BANK: AP
FUND : 101 GENERAL
DEPARTMENT: 121 MUNICIPAL COURT
INVOICE DATE RANGE: 1/01/1998 THRU 99/99/9999
PAY DATE RANGE: 8/03/2020 THRU 8/05/2020
BUDGET TO USE: CB-CURRENT BUDGET

VENDOR	NAME	ITEM #	G/L ACCOUNT	NAME	DESCRIPTION	CHECK #	AMOUNT
01-1925	TIMOTHY D CLOVER LLC	I-3064	101 4121.00-3221.00	Legal Service:	Mun Ct Legal Fees	103673	1,700.00
					VENDOR 01-1925	TOTALS	1,700.00
				DEPARTMENT 121	MUNICIPAL COURT	TOTAL:	1,700.00

VENDOR SET: 01 CITY OF CHANUTE
BANK: AP
FUND : 101 GENERAL
DEPARTMENT: 131 CITY MANAGER'S OFFICE
INVOICE DATE RANGE: 1/01/1998 THRU 99/99/9999
PAY DATE RANGE: 8/03/2020 THRU 8/05/2020
BUDGET TO USE: CB-CURRENT BUDGET

VENDOR	NAME	ITEM #	G/L ACCOUNT	NAME	DESCRIPTION	CHECK #	AMOUNT
01-0235	MC CARTY'S OFFICE MACH	I-P81371-00	101 4131.00-6102.00	Computer Supp:	Toner Cartridges	103698	462.57
					VENDOR 01-0235	TOTALS	462.57
01-0257	NAVRAT'S INC.	I-0171570-001	101 4131.00-6101.00	Office Suppli:	Paper-Stock	103705	79.80
					VENDOR 01-0257	TOTALS	79.80
01-3630	AT&T	I-07152020	101 4131.00-5211.00	Telephone Ser:	Phone Lines	103658	229.46
					VENDOR 01-3630	TOTALS	229.46
01-3904	VERIZON WIRELESS	I-9858893537	101 4131.00-5211.00	Telephone Ser:	Cell Phones	103723	152.66
					VENDOR 01-3904	TOTALS	152.66
01-5216	COPY PRODUCTS INC	I-339000	101 4131.00-4312.00	R&M:Office Eq:	CM Copier Service Ag	103674	69.71
					VENDOR 01-5216	TOTALS	69.71

DEPARTMENT 131 CITY MANAGER'S OFFICE TOTAL: 994.20

VENDOR SET: 01 CITY OF CHANUTE
BANK: AP
FUND : 101 GENERAL
DEPARTMENT: 133 HUMAN RESOURCES
INVOICE DATE RANGE: 1/01/1998 THRU 99/99/9999
PAY DATE RANGE: 8/03/2020 THRU 8/05/2020
BUDGET TO USE: CB-CURRENT BUDGET

VENDOR	NAME	ITEM #	G/L ACCOUNT	NAME	DESCRIPTION	CHECK #	AMOUNT
01-3904	VERIZON WIRELESS	I-9858893537	101 4133.00-5211.00	Telephone Ser:	Cell Phones	103723	78.96
					VENDOR 01-3904	TOTALS	78.96
01-5257	LAKELAND OFFICE SYSTEM	I-IN327559	101 4133.00-4409.00	Other Rentals:	Copier Maint	103690	14.22
					VENDOR 01-5257	TOTALS	14.22
				DEPARTMENT 133	HUMAN RESOURCES	TOTAL:	93.18

VENDOR SET: 01 CITY OF CHANUTE BANK: AP
FUND : 101 GENERAL
DEPARTMENT: 141 COMMUNITY DEVELOPMENT
INVOICE DATE RANGE: 1/01/1998 THRU 99/99/9999
PAY DATE RANGE: 8/03/2020 THRU 8/05/2020
BUDGET TO USE: CB-CURRENT BUDGET

VENDOR	NAME	ITEM #	G/L ACCOUNT	NAME	DESCRIPTION	CHECK #	AMOUNT
01-1416	JLC PROPERITES	I-072420-01	101 4141.00-4502.00	Contractual M:	801 N Washington - M	103685	30.00
01-1416	JLC PROPERITES	I-072420-02	101 4141.00-4502.00	Contractual M:	1215 N Lee - Mowed V	103685	37.50
01-1416	JLC PROPERITES	I-072420-03	101 4141.00-4502.00	Contractual M:	530 N Evergreen - Mo	103685	30.00
01-1416	JLC PROPERITES	I-072420-04	101 4141.00-4502.00	Contractual M:	533 N Central - Mowe	103685	37.50
01-1416	JLC PROPERITES	I-072420-05	101 4141.00-4502.00	Contractual M:	523 N Central - Mowe	103685	22.50
01-1416	JLC PROPERITES	I-072420-06	101 4141.00-4502.00	Contractual M:	501 N Santa Fe - Mow	103685	30.00
					VENDOR 01-1416	TOTALS	187.50
01-2469	ROSS DEBLER	I-1455	101 4141.00-4502.00	Contractual M:	327 W 6th - Mowed	103675	45.00
01-2469	ROSS DEBLER	I-1456	101 4141.00-4502.00	Contractual M:	1018 S Forest - Mowe	103675	30.00
01-2469	ROSS DEBLER	I-1457	101 4141.00-4502.00	Contractual M:	0 S Forest - Mowed -	103675	30.00
01-2469	ROSS DEBLER	I-1458	101 4141.00-4502.00	Contractual M:	108 W 1st - Mowed VL	103675	45.00
01-2469	ROSS DEBLER	I-1461	101 4141.00-4502.00	Contractual M:	410 W 2nd - Mowed VL	103675	30.00
01-2469	ROSS DEBLER	I-1462	101 4141.00-4502.00	Contractual M:	302 S Wilson - Mowed	103675	30.00
01-2469	ROSS DEBLER	I-1463	101 4141.00-4502.00	Contractual M:	711 S Santa Fe - Mow	103675	30.00
01-2469	ROSS DEBLER	I-2469	101 4141.00-4502.00	Contractual M:	1618 S Evergreen - M	103675	30.00
					VENDOR 01-2469	TOTALS	270.00
01-3014	MORGAN SHADE TREE	I-474853	101 4141.00-4502.00	Contractual M:	Grant Main-3rd Railr	103702	90.00
					VENDOR 01-3014	TOTALS	90.00
01-3630	AT&T	I-07152020	101 4141.00-5211.00	Telephone Ser:	Phone Lines	103658	114.73
					VENDOR 01-3630	TOTALS	114.73
01-3904	VERIZON WIRELESS	I-9858893537	101 4141.00-5211.00	Telephone Ser:	Cell Phones	103723	129.35
					VENDOR 01-3904	TOTALS	129.35
					DEPARTMENT 141	COMMUNITY DEVELOPMENT TOTAL:	791.58

VENDOR SET: 01 CITY OF CHANUTE
FUND : 101 GENERAL
DEPARTMENT: 142 LEGAL SERVICES
INVOICE DATE RANGE: 1/01/1998 THRU 99/99/9999
PAY DATE RANGE: 8/03/2020 THRU 8/05/2020
BUDGET TO USE: CB-CURRENT BUDGET

BANK: AP

VENDOR	NAME	ITEM #	G/L ACCOUNT	NAME	DESCRIPTION	CHECK #	AMOUNT
01-3904	VERIZON WIRELESS	I-9858893537	101 4142.00-5211.00	Telephone Ser:	Cell Phones	103723	40.01
					VENDOR 01-3904 TOTALS		40.01
				DEPARTMENT 142	LEGAL SERVICES	TOTAL:	40.01

VENDOR SET: 01 CITY OF CHANUTE BANK: AP
FUND : 101 GENERAL
DEPARTMENT: 171 PUBLIC BUILDINGS/GROUNDS
INVOICE DATE RANGE: 1/01/1998 THRU 99/99/9999
PAY DATE RANGE: 8/03/2020 THRU 8/05/2020
BUDGET TO USE: CB-CURRENT BUDGET

VENDOR	NAME	ITEM #	G/L ACCOUNT	NAME	DESCRIPTION	CHECK #	AMOUNT
01-0289	QUILL CORPORATION	I-8659213	101 4171.01-6536.00	Janitorial & :	Towels	103713	86.26
					VENDOR 01-0289 TOTALS		86.26
01-1393	OTIS ELEVATOR CO.	I-100400053912	101 4171.07-3399.00	Other Contrac:	Service Contract - T	103709	3,696.48
01-1393	OTIS ELEVATOR CO.	I-100400053933	101 4171.01-3399.00	Other Contrac:	Service Contract - M	103709	6,571.56
					VENDOR 01-1393 TOTALS		10,268.04
01-3630	AT&T	I-07152020	101 4171.01-5211.00	Telephone Ser:	Phone Lines	103658	114.73
					VENDOR 01-3630 TOTALS		114.73

DEPARTMENT 171 PUBLIC BUILDINGS/GROUNDS TOTAL: 10,469.03

VENDOR SET: 01 CITY OF CHANUTE
FUND : 101 GENERAL
DEPARTMENT: 211 POLICE
INVOICE DATE RANGE: 1/01/1998 THRU 99/99/9999
PAY DATE RANGE: 8/03/2020 THRU 8/05/2020
BUDGET TO USE: CB-CURRENT BUDGET

VENDOR	NAME	ITEM #	G/L ACCOUNT	NAME	DESCRIPTION	CHECK #	AMOUNT
01-0268	O'REILLY AUTOMOTIVE ST	I-0136-472951	101 4211.05-4311.00	R&M:Motor Veh:	Mini Bulb	103707	3.61
					VENDOR 01-0268 TOTALS		3.61
01-0395	HILLSIDE TOWING	I-001745	101 4211.05-3399.00	Other Contrac:	PD Case #20-0600	103682	120.00
					VENDOR 01-0395 TOTALS		120.00
01-2394	CDW GOVERNMENT LLC	I-ZLL5488	101 4211.05-6107.00	Small Items o:	Remote Access to Ser	103666	944.10
					VENDOR 01-2394 TOTALS		944.10
01-3630	AT&T	I-07152020	101 4211.05-5211.00	Telephone Ser:	Phone Lines	103658	573.66
					VENDOR 01-3630 TOTALS		573.66
01-3904	VERIZON WIRELESS	I-9858893537	101 4211.05-5211.00	Telephone Ser:	Cell Phones	103723	971.40
					VENDOR 01-3904 TOTALS		971.40
01-3928	UNIVERSITY OF KANSAS	I-BA9FF0A8	101 4211.04-5301.00	Education / T:	PD SRO Training #126	103722	350.00
					VENDOR 01-3928 TOTALS		350.00
01-4437	MALLORY SAFETY AND SUP	I-4883889	101 4211.05-6575.00	Uniforms :	PD #122 Uniform Bato	103697	103.95
					VENDOR 01-4437 TOTALS		103.95
01-5216	COPY PRODUCTS INC	I-339120	101 4211.05-4309.00	R&M:Maintenan:	PD Copier	103674	66.45
					VENDOR 01-5216 TOTALS		66.45
					DEPARTMENT 211 POLICE	TOTAL:	3,133.17

VENDOR SET: 01 CITY OF CHANUTE
FUND : 101 GENERAL
DEPARTMENT: 216 DISPATCH
INVOICE DATE RANGE: 1/01/1998 THRU 99/99/9999
PAY DATE RANGE: 8/03/2020 THRU 8/05/2020
BUDGET TO USE: CB-CURRENT BUDGET

VENDOR	NAME	ITEM #	G/L ACCOUNT	NAME	DESCRIPTION	CHECK #	AMOUNT
01-3339	TYLER TECHNOLOGIES	I-130-15051	101 4216.00-5304.00	Training :	Incode Training	103720	130.00
					VENDOR 01-3339 TOTALS		130.00
01-3630	AT&T	I-07-15-2020	101 4216.00-5211.00	Telephone Ser:	Abandoned Call Back	103657	428.01
01-3630	AT&T	I-072020	101 4216.00-5211.00	Telephone Ser:	Dispatch Phone Lines	103659	373.18
					VENDOR 01-3630 TOTALS		801.19
01-3904	VERIZON WIRELESS	I-9858893537	101 4216.00-5211.00	Telephone Ser:	Cell Phones	103723	89.34
					VENDOR 01-3904 TOTALS		89.34
01-4830	POWERPHONE, INC	I-68765	101 4216.00-5304.00	Training :	Public Safety Traini	103711	2,684.00
					VENDOR 01-4830 TOTALS		2,684.00
				DEPARTMENT 216	DISPATCH	TOTAL:	3,704.53

VENDOR SET: 01 CITY OF CHANUTE
FUND : 101 GENERAL
DEPARTMENT: 221 FIRE
INVOICE DATE RANGE: 1/01/1998 THRU 99/99/9999
PAY DATE RANGE: 8/03/2020 THRU 8/05/2020
BUDGET TO USE: CB-CURRENT BUDGET

BANK: AP

VENDOR	NAME	ITEM #	G/L ACCOUNT	NAME	DESCRIPTION	CHECK #	AMOUNT
01-0089	CLEAVERS FARM SUPPLY	C-2002-554165	101 4221.02-6699.00	Misc Building:	Credit	103671	87.82-
	PROJ: 211-2019-002	FIRE		FD Fitness Room			
01-0089	CLEAVERS FARM SUPPLY	C-2003-566162	101 4221.02-6699.00	Misc Building:	Credit	103671	152.00-
	PROJ: 211-2019-002	FIRE		FD Fitness Room			
01-0089	CLEAVERS FARM SUPPLY	I-2007-639811	101 4221.02-6699.00	Misc Building:	Elbow/Nipple/Ball Va	103671	22.08
01-0089	CLEAVERS FARM SUPPLY	I-2007-641895	101 4221.02-6536.00	Janitorial & :	Lime Remover	103671	3.59
					VENDOR 01-0089	TOTALS	214.15-
01-3630	AT&T	I-07152020	101 4221.02-5211.00	Telephone Ser:	Phone Lines	103658	114.74
					VENDOR 01-3630	TOTALS	114.74
01-3904	VERIZON WIRELESS	I-9858893537	101 4221.02-5211.00	Telephone Ser:	Cell Phones	103723	160.04
					VENDOR 01-3904	TOTALS	160.04
01-4607	NATIONAL FLEET TESTING	I-chanutefd2020	101 4221.02-3399.00	Other Contrac:	Ground Ladder Inspec	103703	217.50
					VENDOR 01-4607	TOTALS	217.50
01-5243	PRAIREFIRE COFFEE ROAS	I-1233536	101 4221.02-6528.00	Food :	Coffee	103712	82.00
					VENDOR 01-5243	TOTALS	82.00
				DEPARTMENT 221 FIRE		TOTAL:	360.13

VENDOR SET: 01 CITY OF CHANUTE
FUND : 101 GENERAL
DEPARTMENT: 231 ANIMAL CONTROL
INVOICE DATE RANGE: 1/01/1998 THRU 99/99/9999
PAY DATE RANGE: 8/03/2020 THRU 8/05/2020
BUDGET TO USE: CB-CURRENT BUDGET

VENDOR	NAME	ITEM #	G/L ACCOUNT	NAME	DESCRIPTION	CHECK #	AMOUNT
01-3904	VERIZON WIRELESS	I-9858893537	101 4231.00-5211.00	Telephone Ser:	Cell Phones	103723	98.62
					VENDOR 01-3904 TOTALS		98.62
				DEPARTMENT 231	ANIMAL CONTROL	TOTAL:	98.62

VENDOR SET: 01 CITY OF CHANUTE
FUND : 101 GENERAL
DEPARTMENT: 232 CIVIL DEFENSE
INVOICE DATE RANGE: 1/01/1998 THRU 99/99/9999
PAY DATE RANGE: 8/03/2020 THRU 8/05/2020
BUDGET TO USE: CB-CURRENT BUDGET

VENDOR	NAME	ITEM #	G/L ACCOUNT	NAME	DESCRIPTION	CHECK #	AMOUNT
01-3630	AT&T	I-07152020	101 4232.00-5211.00	Telephone Ser:	Erie Storm Sirens Co	103658	114.73
					VENDOR 01-3630	TOTALS	114.73
				DEPARTMENT 232	CIVIL DEFENSE	TOTAL:	114.73

VENDOR SET: 01 CITY OF CHANUTE
BANK: AP
FUND : 101 GENERAL
DEPARTMENT: 311 STREETS AND ROADS
INVOICE DATE RANGE: 1/01/1998 THRU 99/99/9999
PAY DATE RANGE: 8/03/2020 THRU 8/05/2020
BUDGET TO USE: CB-CURRENT BUDGET

VENDOR	NAME	ITEM #	G/L ACCOUNT	NAME	DESCRIPTION	CHECK #	AMOUNT
01-0089	CLEAVERS FARM SUPPLY	I-2007-645455	101 4311.01-6599.00	Miscellaneous:	Batteries	103671	5.84
					VENDOR 01-0089	TOTALS	5.84
01-0131	FASTENAL COMPANY	I-KSCHA102165	101 4311.01-6565.00	Small Tools &:	Handle/Broom	103676	109.53
					VENDOR 01-0131	TOTALS	109.53
01-0311	SHERWIN WILLIAMS	I-8009-4	101 4311.01-6548.00	Painting Supp:	Valve	103716	191.73
01-0311	SHERWIN WILLIAMS	I-8241-3	101 4311.01-6548.00	Painting Supp:	Valve/Paint Gun	103716	389.73
					VENDOR 01-0311	TOTALS	581.46
01-0715	CLEAN UNIFORM COMPANY	I-20152749	101 4311.01-4409.00	Other Rentals:	Uniforms - Street	103670	31.98
					VENDOR 01-0715	TOTALS	31.98
01-3344	NATIONAL SIGN CO., INC	I-IN-194044	101 4311.01-6564.00	Sign Supplies:	Sheeting	103704	253.73
					VENDOR 01-3344	TOTALS	253.73
01-3904	VERIZON WIRELESS	I-9858893537	101 4311.01-5211.00	Telephone Ser:	Cell Phones	103723	218.69
					VENDOR 01-3904	TOTALS	218.69
				DEPARTMENT 311	STREETS AND ROADS	TOTAL:	1,201.23

VENDOR SET: 01 CITY OF CHANUTE
FUND : 101 GENERAL
DEPARTMENT: 331 AIRPORT
INVOICE DATE RANGE: 1/01/1998 THRU 99/99/9999
PAY DATE RANGE: 8/03/2020 THRU 8/05/2020
BUDGET TO USE: CB-CURRENT BUDGET

VENDOR	NAME	ITEM #	G/L ACCOUNT	NAME	DESCRIPTION	CHECK #	AMOUNT
01-0289	QUILL CORPORATION	I-8659213	101 4331.00-6536.00	Janitorial & :	Towels	103713	26.55
					VENDOR 01-0289 TOTALS		26.55
01-0311	SHERWIN WILLIAMS	I-8074-8	101 4331.00-4302.00	R&M:Building :	Paint/Painting Suppl	103716	64.35
					VENDOR 01-0311 TOTALS		64.35
01-3630	AT&T	I-07152020	101 4331.00-5211.00	Telephone Ser:	Phone Lines	103658	114.73
					VENDOR 01-3630 TOTALS		114.73
					DEPARTMENT 331 AIRPORT	TOTAL:	205.63

VENDOR SET: 01 CITY OF CHANUTE BANK: AP
FUND : 101 GENERAL
DEPARTMENT: 511 PARKS
INVOICE DATE RANGE: 1/01/1998 THRU 99/99/9999
PAY DATE RANGE: 8/03/2020 THRU 8/05/2020
BUDGET TO USE: CB-CURRENT BUDGET

VENDOR	NAME	ITEM #	G/L ACCOUNT	NAME	DESCRIPTION	CHECK #	AMOUNT
01-0089	CLEAVERS FARM SUPPLY	I-2007-644785	101 4511.00-6532.00	Hardware :	Strap	103671	22.44
01-0089	CLEAVERS FARM SUPPLY	I-2007-644801	101 4511.00-6548.00	Painting Supp:	Clear Sheeting	103671	28.79
					VENDOR 01-0089 TOTALS		51.23
01-0411	HUGO'S INDUSTRIAL SUPP	I-243160.1	101 4511.00-6536.00	Janitorial & :	Magic Erasers	103683	15.86
					VENDOR 01-0411 TOTALS		15.86
01-0657	LOCKE SUPPLY COMPANY	I-40796215-00	101 4511.00-6514.00	Electrical Su:	Misc Electrical Supp	103695	103.66
					VENDOR 01-0657 TOTALS		103.66
01-3904	VERIZON WIRELESS	I-9858893537	101 4511.00-5211.00	Telephone Ser:	Cell Phones	103723	84.05
					VENDOR 01-3904 TOTALS		84.05
01-4001	LANG DIESEL, INC	I-P19172	101 4511.00-6705.00	Machinery and:	Caps/Weedeater Line	103691	175.81
					VENDOR 01-4001 TOTALS		175.81
01-5266	VERNA BOCKOVER	I-072520-CP	101 4511.00-4201.00	Custodial Ser:	Central Park 07/12-0	103662	230.00
					VENDOR 01-5266 TOTALS		230.00
				DEPARTMENT 511 PARKS		TOTAL:	660.61

VENDOR SET: 01 CITY OF CHANUTE
FUND : 101 GENERAL
DEPARTMENT: 512 SWIMMING POOL
INVOICE DATE RANGE: 1/01/1998 THRU 99/99/9999
PAY DATE RANGE: 8/03/2020 THRU 8/05/2020
BUDGET TO USE: CB-CURRENT BUDGET

VENDOR	NAME	ITEM #	G/L ACCOUNT	NAME	DESCRIPTION	CHECK #	AMOUNT
01-4587	HENRY KRAFT, INC	I-307237	101 4512.00-6536.00	Janitorial & :	Trash Bags	103681	132.90
01-4587	HENRY KRAFT, INC	I-307237	101 4512.00-6510.00	Concessions-S:	Concessions	103681	253.08
01-4587	HENRY KRAFT, INC	I-307367	101 4512.00-6510.00	Concessions-S:	Concessions	103681	104.17
					VENDOR 01-4587	TOTALS	490.15
01-5169	UNITED INDUSTRIES INCO	I-0071468-IN	101 4512.00-6506.00	Chemicals :	Muriatic Acid	103721	503.00
					VENDOR 01-5169	TOTALS	503.00
				DEPARTMENT 512	SWIMMING POOL	TOTAL:	993.15

VENDOR SET: 01 CITY OF CHANUTE BANK: AP
FUND : 101 GENERAL
DEPARTMENT: 513 BASEBALL/SOFTBALL PARKS
INVOICE DATE RANGE: 1/01/1998 THRU 99/99/9999
PAY DATE RANGE: 8/03/2020 THRU 8/05/2020
BUDGET TO USE: CB-CURRENT BUDGET

VENDOR	NAME	ITEM #	G/L ACCOUNT	NAME	DESCRIPTION	CHECK #	AMOUNT
01-0089	CLEAVERS FARM SUPPLY	I-2007-644814	101 4513.00-6603.00	Cement and Co:	Visqueen Sheeting	103671	160.44
	PROJ: 217-2018-002	PARKS		Santa Fe Baseball Complex			
01-0089	CLEAVERS FARM SUPPLY	I-2007-644962	101 4513.00-6565.00	Small Tools &:	Turnbuckles/Rope	103671	411.00
	PROJ: 217-2018-002	PARKS		Santa Fe Baseball Complex			
01-0089	CLEAVERS FARM SUPPLY	I-2007-644962	101 4513.00-6699.00	Misc Building:	Cable/Thimbles	103671	1,177.00
	PROJ: 217-2018-002	PARKS		Santa Fe Baseball Complex			
					VENDOR 01-0089 TOTALS		1,748.44
01-0131	FASTENAL COMPANY	I-KSCHA102130	101 4513.00-6532.00	Hardware :	Staples	103676	107.53
	PROJ: 217-2018-002	PARKS		Santa Fe Baseball Complex			
01-0131	FASTENAL COMPANY	I-KSCHA102130	101 4513.00-6565.00	Small Tools &:	Taps/Bits/Lube/Rags	103676	206.77
	PROJ: 217-2018-002	PARKS		Santa Fe Baseball Complex			
					VENDOR 01-0131 TOTALS		314.30
01-5262	HAMMERSON	I-16674	101 4513.00-6603.00	Cement and Co:	Concrete	103679	2,156.00
	PROJ: 217-2018-002	PARKS		Santa Fe Baseball Complex			
					VENDOR 01-5262 TOTALS		2,156.00
					DEPARTMENT 513 BASEBALL/SOFTBALL PARKS TOTAL:		4,218.74

VENDOR SET: 01 CITY OF CHANUTE
BANK: AP
FUND : 101 GENERAL
DEPARTMENT: 516 GOLF COURSE
INVOICE DATE RANGE: 1/01/1998 THRU 99/99/9999
PAY DATE RANGE: 8/03/2020 THRU 8/05/2020
BUDGET TO USE: CB-CURRENT BUDGET

VENDOR	NAME	ITEM #	G/L ACCOUNT	NAME	DESCRIPTION	CHECK #	AMOUNT
01-0089	CLEAVERS FARM SUPPLY	I-2007-643485	101 4516.00-6599.00	Miscellaneous:	Water Coolers	103671	134.97
01-0089	CLEAVERS FARM SUPPLY	I-2007-643953	101 4516.00-6565.00	Small Tools &:	Chain Hoists	103671	153.70
01-0089	CLEAVERS FARM SUPPLY	I-2007-644844	101 4516.00-6553.00	Plumbing Supp:	Spigot Lever	103671	6.99
01-0089	CLEAVERS FARM SUPPLY	I-2007-644883	101 4516.00-6699.00	Misc Building:	Mending Plates/Bit	103671	6.10
					VENDOR 01-0089	TOTALS	301.76
01-3904	VERIZON WIRELESS	I-9858893537	101 4516.00-5211.00	Telephone Ser:	Cell Phones	103723	89.66
					VENDOR 01-3904	TOTALS	89.66
01-5136	CALLAWAY GOLF	I-931692503	101 4516.00-6511.00	Merchandise f:	Golf Balls	103664	111.48
					VENDOR 01-5136	TOTALS	111.48
				DEPARTMENT 516	GOLF COURSE	TOTAL:	502.90

VENDOR SET: 01 CITY OF CHANUTE
FUND : 101 GENERAL
DEPARTMENT: 523 AUDITORIUM MGT SERVICES
INVOICE DATE RANGE: 1/01/1998 THRU 99/99/9999
PAY DATE RANGE: 8/03/2020 THRU 8/05/2020
BUDGET TO USE: CB-CURRENT BUDGET

VENDOR	NAME	ITEM #	G/L ACCOUNT	NAME	DESCRIPTION	CHECK #	AMOUNT
01-3904	VERIZON WIRELESS	I-9858893537	101 4523.00-5211.00	Telephone Ser:	Cell Phones	103723	84.68
					VENDOR 01-3904 TOTALS		84.68
				DEPARTMENT 523	AUDITORIUM MGT SERVICES	TOTAL:	84.68
				VENDOR SET 101	GENERAL	TOTAL:	29,526.16

VENDOR SET: 01 CITY OF CHANUTE
FUND : 217 RECREATION COMPLEX
DEPARTMENT: 550 RECREATION COMMISSION
INVOICE DATE RANGE: 1/01/1998 THRU 99/99/9999
PAY DATE RANGE: 8/03/2020 THRU 8/05/2020
BUDGET TO USE: CB-CURRENT BUDGET

VENDOR	NAME	ITEM #	G/L ACCOUNT	NAME	DESCRIPTION	CHECK #	AMOUNT
01-4375	CDL	I-C052651	217 4550.00-3399.00	Other Contrac:	Monthly Fire Alarm F	103665	90.00
					VENDOR 01-4375 TOTALS		90.00
				DEPARTMENT 550	RECREATION COMMISSION	TOTAL:	90.00
				VENDOR SET 217	RECREATION COMPLEX	TOTAL:	90.00

VENDOR SET: 01 CITY OF CHANUTE
FUND : 321 CAPITAL IMPROVEMENT #2
DEPARTMENT: 231 ANIMAL CONTROL
INVOICE DATE RANGE: 1/01/1998 THRU 99/99/9999
PAY DATE RANGE: 8/03/2020 THRU 8/05/2020
BUDGET TO USE: CB-CURRENT BUDGET

VENDOR	NAME	ITEM #	G/L ACCOUNT	NAME	DESCRIPTION	CHECK #	AMOUNT
01-0311	SHERWIN WILLIAMS	I-7929-4	321 4231.00-7001.01	Animal Contro:	Block Filler	103716	405.99
	PROJ: 160-2018-001	COMMUNITY WIDE		New Building - Animal Shelter			
01-0311	SHERWIN WILLIAMS	I-7988-0 07-2020	321 4231.00-7001.01	Animal Contro:	Bolck Filler Paint f	103716	525.00
	PROJ: 160-2018-001	COMMUNITY WIDE		New Building - Animal Shelter			
					VENDOR 01-0311 TOTALS		930.99
				DEPARTMENT 231	ANIMAL CONTROL	TOTAL:	930.99
				VENDOR SET 321	CAPITAL IMPROVEMENT #2	TOTAL:	930.99

VENDOR SET: 01 CITY OF CHANUTE
BANK: AP
FUND : 501 ELECTRIC UTILITY
DEPARTMENT: 411 ELECTRIC PRODUCTION
INVOICE DATE RANGE: 1/01/1998 THRU 99/99/9999
PAY DATE RANGE: 8/03/2020 THRU 8/05/2020
BUDGET TO USE: CB-CURRENT BUDGET

VENDOR	NAME	ITEM #	G/L ACCOUNT	NAME	DESCRIPTION	CHECK #	AMOUNT
01-2206	EVERGY KANSAS CENTRAL	I-07302020	501 4411.03-6558.00	Transmission :	Trans Estimate 07/26	000188	49,281.64
					VENDOR 01-2206 TOTALS		49,281.64
01-3630	AT&T	I-07152020	501 4411.01-5211.00	Telephone Ser:	Phone Line	103658	688.39
01-3630	AT&T	I-07152020	501 4411.01-5211.00	Telephone Ser:	SEG-Westar Meter Com	103658	10.19
01-3630	AT&T	I-07152020	501 4411.01-5211.00	Telephone Ser:	SEG-Westar Meter Com	103658	10.19
01-3630	AT&T	I-07152020	501 4411.01-5211.00	Telephone Ser:	SEG-Westar Meter Com	103658	10.20
	PROJ: 510-2016-001	ELECTRIC PROJECTS	FECA Reimbursement				
01-3630	AT&T	I-07152020	501 4411.01-5211.00	Telephone Ser:	SEG-Westar Meter Com	103658	10.19
01-3630	AT&T	I-07152020	501 4411.01-5211.00	Telephone Ser:	SEG-Westar Meter Com	103658	10.19
01-3630	AT&T	I-07152020	501 4411.01-5211.00	Telephone Ser:	SEG-Westar Meter Com	103658	10.19
01-3630	AT&T	I-07152020	501 4411.01-5211.00	Telephone Ser:	SEG-Westar Meter Com	103658	10.19
01-3630	AT&T	I-07152020	501 4411.01-5211.00	Telephone Ser:	SEG Meter Comm - Iol	103658	8.91
01-3630	AT&T	I-07152020	501 4411.01-5211.00	Telephone Ser:	SEG Meter Comm - Sab	103658	8.91
01-3630	AT&T	I-07152020	501 4411.01-5211.00	Telephone Ser:	SEG Meter Comm - Cha	103658	17.83
	PROJ: 510-2016-001	ELECTRIC PROJECTS	FECA Reimbursement				
01-3630	AT&T	I-07152020	501 4411.01-5211.00	Telephone Ser:	SEG Meter Comm - Fre	103658	8.91
01-3630	AT&T	I-07152020	501 4411.01-5211.00	Telephone Ser:	SEG Meter Comm - Cen	103658	8.91
01-3630	AT&T	I-07152020	501 4411.01-5211.00	Telephone Ser:	SEG Meter Comm - Arc	103658	8.91
01-3630	AT&T	I-07152020	501 4411.01-5211.00	Telephone Ser:	SEG Meter Comm - Axt	103658	8.91
					VENDOR 01-3630 TOTALS		831.02
01-3904	VERIZON WIRELESS	I-9858893537	501 4411.01-5211.00	Telephone Ser:	Cell Phones	103723	175.54
					VENDOR 01-3904 TOTALS		175.54
01-5155	SEAN LEROY	I-07-2020	501 4411.01-6507.00	Clothing - Pr:	Clothing Reimburseme	103692	660.90
					VENDOR 01-5155 TOTALS		660.90
					DEPARTMENT 411 ELECTRIC PRODUCTION	TOTAL:	50,949.10

VENDOR SET: 01 CITY OF CHANUTE
FUND : 501 ELECTRIC UTILITY
DEPARTMENT: 413 ELECTRIC DISTRIBUTION
INVOICE DATE RANGE: 1/01/1998 THRU 99/99/9999
PAY DATE RANGE: 8/03/2020 THRU 8/05/2020
BUDGET TO USE: CB-CURRENT BUDGET

VENDOR	NAME	ITEM #	G/L ACCOUNT	NAME	DESCRIPTION	CHECK #	AMOUNT
01-0088	CLEAVERS FARM & HOME	I-2007-645472	501 4413.04-6572.00	Tools :	Ext Cord	103672	64.05
01-0088	CLEAVERS FARM & HOME	I-2007-645507	501 4413.02-6599.00	Miscellaneous:	Stakes/Flag Tape	103672	12.20
01-0088	CLEAVERS FARM & HOME	I-2007-645559	501 4413.02-6565.00	Small Tools &:	Measuring Wheel	103672	68.97
01-0088	CLEAVERS FARM & HOME	I-2007-646008	501 4413.02-6599.00	Miscellaneous:	RR Ties	103672	228.46
					VENDOR 01-0088 TOTALS		373.68
01-0131	FASTENAL COMPANY	I-KSCHA102137	501 4413.02-6559.00	Safety Materi:	Towelettes/Sqwincher	103676	79.52
					VENDOR 01-0131 TOTALS		79.52
01-0229	LOCKE SUPPLY COMPANY	I-40813644-00	501 4413.04-6532.00	Hardware :	Lugs/Covers	103694	150.73
01-0229	LOCKE SUPPLY COMPANY	I-40813707-00	501 4413.04-6572.00	Tools :	Sling w/ Bucket/Pouc	103694	28.49
01-0229	LOCKE SUPPLY COMPANY	I-40825684-00	501 4413.04-6532.00	Hardware :	Lugs	103694	107.26
					VENDOR 01-0229 TOTALS		286.48
01-0318	STANION WHOLESALE	I-4941897-00	501 4413.02-6526.00	Fixtures :	LED Street Light Fix	103718	5,426.40
01-0318	STANION WHOLESALE	I-4971097-00	501 4413.04-6514.00	Electrical Su:	Circuit Breakers	103718	138.73
	PROJ: 217-2018-002	PARKS		Santa Fe Baseball Complex			
01-0318	STANION WHOLESALE	I-4971252-00	501 4413.02-6532.00	Hardware :	Covers	103718	63.52
01-0318	STANION WHOLESALE	I-4974041-00	501 4413.04-6703.00	Meter Sockets:	Disconnect Sleeve	103718	26.73
01-0318	STANION WHOLESALE	I-4975518-00	501 4413.04-6571.00	Tape :	Electrical Tape	103718	64.85
01-0318	STANION WHOLESALE	I-4975620-00	501 4413.02-6565.00	Small Tools &:	Fish Tape	103718	117.98
01-0318	STANION WHOLESALE	I-4976385-00	501 4413.04-6532.00	Hardware :	Lugs	103718	98.00
01-0318	STANION WHOLESALE	I-4977456-00	501 4413.02-6532.00	Hardware :	Connectors	103718	52.56
					VENDOR 01-0318 TOTALS		5,988.77
01-0657	LOCKE SUPPLY COMPANY	I-40792170-00	501 4413.04-6514.00	Electrical Su:	Receptacle/Box/Cover	103695	30.03
	PROJ: 217-2018-002	PARKS		Santa Fe Baseball Complex			
					VENDOR 01-0657 TOTALS		30.03
01-0715	CLEAN UNIFORM COMPANY	I-20152751	501 4413.02-6507.00	Clothing - Pr:	Uniforms - Elec Dist	103670	98.34
01-0715	CLEAN UNIFORM COMPANY	I-20152752	501 4413.04-6507.00	Clothing - Pr:	Uniforms - Elec Mete	103670	72.81
					VENDOR 01-0715 TOTALS		171.15
01-0834	RAVIN PRINTING	I-49961	501 4413.04-6101.00	Office Suppli:	Service Order Books	103714	183.80
					VENDOR 01-0834 TOTALS		183.80

VENDOR SET: 01 CITY OF CHANUTE
FUND : 501 ELECTRIC UTILITY
DEPARTMENT: 413 ELECTRIC DISTRIBUTION
INVOICE DATE RANGE: 1/01/1998 THRU 99/99/9999
PAY DATE RANGE: 8/03/2020 THRU 8/05/2020
BUDGET TO USE: CB-CURRENT BUDGET

VENDOR	NAME	ITEM #	G/L ACCOUNT	NAME	DESCRIPTION	CHECK #	AMOUNT
01-2684	BUMPER TO BUMPER	I-1558433	501 4413.02-6705.00	Machinery and:	Wiper Blades - #357	103663	28.29
					VENDOR 01-2684 TOTALS		28.29
01-2913	MIDWEST MINERALS LLC	I-446972	501 4413.02-6616.00	Rock :	Rock	103701	594.47
					VENDOR 01-2913 TOTALS		594.47
01-3904	VERIZON WIRELESS	I-9858893537	501 4413.02-5211.00	Telephone Ser:	Cell Phones	103723	134.01
					VENDOR 01-3904 TOTALS		134.01
01-4262	RED MUNICIPAL & INDUST	I-13665	501 4413.02-6705.00	Machinery and:	Hyd. Sewage Hose Men	103715	290.87
					VENDOR 01-4262 TOTALS		290.87

DEPARTMENT 413 ELECTRIC DISTRIBUTION TOTAL: 8,161.07

VENDOR SET 501 ELECTRIC UTILITY TOTAL: 59,110.17

VENDOR SET: 01 CITY OF CHANUTE
FUND : 502 WATER UTILITY
DEPARTMENT: 422 WATER TREATMENT PLANT
INVOICE DATE RANGE: 1/01/1998 THRU 99/99/9999
PAY DATE RANGE: 8/03/2020 THRU 8/05/2020
BUDGET TO USE: CB-CURRENT BUDGET

VENDOR	NAME	ITEM #	G/L ACCOUNT	NAME	DESCRIPTION	CHECK #	AMOUNT
01-0089	CLEAVERS FARM SUPPLY	I-2007-642568	502 4422.01-6705.00	Machinery and:	Coupling/PVC/Cable T	103671	29.13
01-0089	CLEAVERS FARM SUPPLY	I-2007-643285	502 4422.01-6107.00	Small Items o:	Mirror/Clip/Hook	103671	26.52
					VENDOR 01-0089	TOTALS	55.65
01-0131	FASTENAL COMPANY	I-KSCHA102202	502 4422.01-6559.00	Safety Materi:	Respirators	103676	254.12
					VENDOR 01-0131	TOTALS	254.12
01-0155	HACH COMPANY	I-12045119	502 4422.01-6537.00	Laboratory Su:	Ampule Kit	103678	254.00
					VENDOR 01-0155	TOTALS	254.00
01-0715	CLEAN UNIFORM COMPANY	I-20152754	502 4422.01-4409.00	Other Rentals:	Uniforms - WTP	103670	45.80
					VENDOR 01-0715	TOTALS	45.80
01-2610	AIRGAS USA, LLC	I-9103110190	502 4422.01-5702.00	Freight Charg:	UPS	103656	20.28
01-2610	AIRGAS USA, LLC	I-9103297065	502 4422.01-5702.00	Freight Charg:	UPS	103656	8.89
					VENDOR 01-2610	TOTALS	29.17
01-3630	AT&T	I-07152020	502 4422.01-5211.00	Telephone Ser:	Phone Lines	103658	114.73
					VENDOR 01-3630	TOTALS	114.73
01-3635	HAWKINS, INC.	I-4754906	502 4422.01-6506.00	Chemicals :	Chemicals @ WTP	103680	4,485.97
					VENDOR 01-3635	TOTALS	4,485.97
01-3904	VERIZON WIRELESS	I-9858893537	502 4422.01-5211.00	Telephone Ser:	Cell Phones	103723	169.36
					VENDOR 01-3904	TOTALS	169.36
01-4262	RED MUNICIPAL & INDUST	I-13665	502 4422.01-6705.00	Machinery and:	Hyd. Sewage Hose Men	103715	290.86
					VENDOR 01-4262	TOTALS	290.86

VENDOR SET: 01 CITY OF CHANUTE
FUND : 502 WATER UTILITY
DEPARTMENT: 422 WATER TREATMENT PLANT
INVOICE DATE RANGE: 1/01/1998 THRU 99/99/9999
PAY DATE RANGE: 8/03/2020 THRU 8/05/2020
BUDGET TO USE: CB-CURRENT BUDGET

VENDOR	NAME	ITEM #	G/L ACCOUNT	NAME	DESCRIPTION	CHECK #	AMOUNT
01-4896	BOGDAN CIUFULESCU	I-08072020	502 4422.01-5707.00	Travel Expens:	Water III Operator E	103669	16.00
					VENDOR 01-4896 TOTALS		16.00

DEPARTMENT 422 WATER TREATMENT PLANT TOTAL: 5,715.66

VENDOR SET: 01 CITY OF CHANUTE
FUND : 502 WATER UTILITY
DEPARTMENT: 423 WATER TRANSMISSION/DISTR
INVOICE DATE RANGE: 1/01/1998 THRU 99/99/9999
PAY DATE RANGE: 8/03/2020 THRU 8/05/2020
BUDGET TO USE: CB-CURRENT BUDGET

VENDOR	NAME	ITEM #	G/L ACCOUNT	NAME	DESCRIPTION	CHECK #	AMOUNT
01-0089	CLEAVERS FARM SUPPLY	I-2007-646567	502 4423.01-6599.00	Miscellaneous:	to Make Water Meter	103671	109.40
					VENDOR 01-0089 TOTALS		109.40
01-0131	FASTENAL COMPANY	I-KSCHA102201	502 4423.01-6599.00	Miscellaneous:	Misc	103676	17.00
					VENDOR 01-0131 TOTALS		17.00
01-0267	O'BRIEN ROCK CO., INC.	C-103479	502 4423.01-6603.00	Cement and C:	Credit from Pmt 1034	103706	303.00-
01-0267	O'BRIEN ROCK CO., INC.	I-83476	502 4423.01-6603.00	Cement and C:	Concrete	103706	329.00
					VENDOR 01-0267 TOTALS		26.00
01-0269	OIL PATCH PUMP & SUPPL	I-192459	502 4423.01-6525.00	Fittings :	Lubricant/Bushing/Co	103708	40.72
					VENDOR 01-0269 TOTALS		40.72
01-0715	CLEAN UNIFORM COMPANY	I-20152749	502 4423.01-4409.00	Other Rentals:	Uniforms - Water	103670	36.30
					VENDOR 01-0715 TOTALS		36.30
01-3904	VERIZON WIRELESS	I-9858893537	502 4423.01-5211.00	Telephone Ser:	Cell Phones	103723	53.95
					VENDOR 01-3904 TOTALS		53.95
01-4262	RED MUNICIPAL & INDUST	I-13665	502 4423.01-6705.00	Machinery and:	Hyd. Sewage Hose Men	103715	290.86
					VENDOR 01-4262 TOTALS		290.86
01-5262	HAMMERSON	I-16655G	502 4423.01-6603.00	Cement and C:	Concrete	103679	122.50
					VENDOR 01-5262 TOTALS		122.50

DEPARTMENT 423 WATER TRANSMISSION/DISTR TOTAL: 696.73

VENDOR SET: 01 CITY OF CHANUTE
FUND : 502 WATER UTILITY
DEPARTMENT: 711 OTHER FINANCING USES
INVOICE DATE RANGE: 1/01/1998 THRU 99/99/9999
PAY DATE RANGE: 8/03/2020 THRU 8/05/2020
BUDGET TO USE: CB-CURRENT BUDGET

VENDOR	NAME	ITEM #	G/L ACCOUNT	NAME	DESCRIPTION	CHECK #	AMOUNT
01-0202	KANSAS DEPARTMENT OF	I-2722 07-2020	502 4711.02-9101.01	No. 2722 - Pr:	Water Project #2722	103687	1,371.55
01-0202	KANSAS DEPARTMENT OF	I-2722 07-2020	502 4711.02-9102.01	No. 2722 - In:	Water Project #2722	103687	804.45
01-0202	KANSAS DEPARTMENT OF	I-2722 07-2020	502 4711.02-9103.01	No. 2722 - Se:	Water Project #2722	103687	76.93
01-0202	KANSAS DEPARTMENT OF	I-2837 07-2020	502 4711.03-9101.01	No. 2837-Prin:	Water Project #2837	103688	8,989.62
	PROJ: 520-2011-006	WATER PROJECTS		Zebra Mussels			
01-0202	KANSAS DEPARTMENT OF	I-2837 07-2020	502 4711.03-9102.01	No. 2837-Inte:	Water Project #2837	103688	4,114.57
	PROJ: 520-2011-006	WATER PROJECTS		Zebra Mussels			
01-0202	KANSAS DEPARTMENT OF	I-2837 07-2020	502 4711.03-9103.01	No. 2837-Serv:	Water Project #2837	103688	602.55
	PROJ: 520-2011-006	WATER PROJECTS		Zebra Mussels			
01-0202	KANSAS DEPARTMENT OF	I-2931 07-2020	502 4711.04-9101.01	No. 2931 - Pr:	Water Project #2931	103689	20,509.98
01-0202	KANSAS DEPARTMENT OF	I-2931 07-2020	502 4711.04-9102.01	No. 2931 - In:	Water Project #2931	103689	5,276.99
01-0202	KANSAS DEPARTMENT OF	I-2931 07-2020	502 4711.04-9103.01	No. 2931 - Se:	Water Project #2931	103689	1,037.61
					VENDOR 01-0202	TOTALS	42,784.25

DEPARTMENT 711 OTHER FINANCING USES TOTAL: 42,784.25

VENDOR SET 502 WATER UTILITY TOTAL: 49,196.64

VENDOR SET: 01 CITY OF CHANUTE
FUND : 503 GAS UTILITY
DEPARTMENT: 434 GAS DISTRIBUTION
INVOICE DATE RANGE: 1/01/1998 THRU 99/99/9999
PAY DATE RANGE: 8/03/2020 THRU 8/05/2020
BUDGET TO USE: CB-CURRENT BUDGET

VENDOR	NAME	ITEM #	G/L ACCOUNT	NAME	DESCRIPTION	CHECK #	AMOUNT
01-0088	CLEAVERS FARM & HOME	I-2007-646058	503 4434.02-6559.00	Safety Materi:	Fire Extingisher Tru	103672	51.24
					VENDOR 01-0088	TOTALS	51.24
01-0182	INTERSTATE BATTERY SYS	I-100107083	503 4434.02-6599.00	Miscellaneous:	Batteries	103684	29.00
					VENDOR 01-0182	TOTALS	29.00
01-0311	SHERWIN WILLIAMS	I-0979-9	503 4434.02-6548.00	Painting Supp:	Paint Thinner	103716	12.93
					VENDOR 01-0311	TOTALS	12.93
01-0715	CLEAN UNIFORM COMPANY	I-20152748	503 4434.02-6507.00	Clothing - Pr:	Uniforms - Gas	103670	113.44
					VENDOR 01-0715	TOTALS	113.44
01-2610	AIRGAS USA, LLC	I-9103160134	503 4434.02-5206.00	Parcel Delive:	UPS	103656	93.07
					VENDOR 01-2610	TOTALS	93.07
01-3360	MONTY BAILEY	I-07242020	503 4434.02-5704.00	Meeting Expen:	Inspecting Odorant S	103660	97.08
					VENDOR 01-3360	TOTALS	97.08
01-3904	VERIZON WIRELESS	I-9858893537	503 4434.02-5211.00	Telephone Ser:	Cell Phones	103723	254.04
					VENDOR 01-3904	TOTALS	254.04
01-4262	RED MUNICIPAL & INDUST	I-13665	503 4434.02-6705.00	Machinery and:	Hyd. Sewage Hose Men	103715	290.87
					VENDOR 01-4262	TOTALS	290.87
01-5262	HAMMERSON	I-16656G	503 4434.02-6603.00	Cement and C:	Concrete	103679	220.50
					VENDOR 01-5262	TOTALS	220.50

DEPARTMENT 434 GAS DISTRIBUTION TOTAL: 1,162.17

VENDOR SET 503 GAS UTILITY TOTAL: 1,162.17

VENDOR SET: 01 CITY OF CHANUTE
BANK: AP
FUND : 504 REFUSE UTILITY
DEPARTMENT: 441 REFUSE UTILITY DEPARTMENT
INVOICE DATE RANGE: 1/01/1998 THRU 99/99/9999
PAY DATE RANGE: 8/03/2020 THRU 8/05/2020
BUDGET TO USE: CB-CURRENT BUDGET

VENDOR	NAME	ITEM #	G/L ACCOUNT	NAME	DESCRIPTION	CHECK #	AMOUNT
01-0715	CLEAN UNIFORM COMPANY	I-20152753	504 4441.00-4409.00	Other Rentals:	Uniforms - Sanitaito	103670	28.84
					VENDOR 01-0715 TOTALS		28.84
01-3904	VERIZON WIRELESS	I-9858893537	504 4441.00-5211.00	Telephone Ser:	Cell Phones	103723	53.95
					VENDOR 01-3904 TOTALS		53.95
				DEPARTMENT 441	REFUSE UTILITY DEPARTMENTTOTAL:		82.79

VENDOR SET: 01 CITY OF CHANUTE
FUND : 504 REFUSE UTILITY
DEPARTMENT: 442 REFUSE LANDFILL
INVOICE DATE RANGE: 1/01/1998 THRU 99/99/9999
PAY DATE RANGE: 8/03/2020 THRU 8/05/2020
BUDGET TO USE: CB-CURRENT BUDGET

VENDOR	NAME	ITEM #	G/L ACCOUNT	NAME	DESCRIPTION	CHECK #	AMOUNT
01-0089	CLEAVERS FARM SUPPLY	I-2007-643292	504 4442.00-6599.00	Miscellaneous:	Keys	103671	2.68
01-0089	CLEAVERS FARM SUPPLY	I-2007-645540	504 4442.00-6565.00	Small Tools &:	Hoe	103671	16.19
					VENDOR 01-0089	TOTALS	18.87
01-0229	LOCKE SUPPLY COMPANY	I-40770262-00	504 4442.00-6705.00	Machinery and:	Elec Supplies	103694	83.34
					VENDOR 01-0229	TOTALS	83.34
01-0411	HUGO'S INDUSTRIAL SUPP	I-243269	504 4442.00-6702.00	Cleaning Mate:	Air Freshener	103683	74.04
					VENDOR 01-0411	TOTALS	74.04
01-0715	CLEAN UNIFORM COMPANY	I-20152753	504 4442.00-4409.00	Other Rentals:	Uniforms - Landfill	103670	7.72
					VENDOR 01-0715	TOTALS	7.72
01-3904	VERIZON WIRELESS	I-9858893537	504 4442.00-5211.00	Telephone Ser:	Cell Phones	103723	89.34
					VENDOR 01-3904	TOTALS	89.34
				DEPARTMENT 442	REFUSE LANDFILL	TOTAL:	273.31
				VENDOR SET 504	REFUSE UTILITY	TOTAL:	356.10

VENDOR SET: 01 CITY OF CHANUTE
FUND : 505 SEWER UTILITY
DEPARTMENT: 451 SEWER COLLECTION
INVOICE DATE RANGE: 1/01/1998 THRU 99/99/9999
PAY DATE RANGE: 8/03/2020 THRU 8/05/2020
BUDGET TO USE: CB-CURRENT BUDGET

BANK: AP

VENDOR	NAME	ITEM #	G/L ACCOUNT	NAME	DESCRIPTION	CHECK #	AMOUNT
01-0715	CLEAN UNIFORM COMPANY	I-20152749	505 4451.01-4409.00	Other Rentals:	Uniforms - WWC	103670	15.40
					VENDOR 01-0715	TOTALS	15.40
01-3904	VERIZON WIRELESS	I-9858893537	505 4451.02-5211.00	Telephone Ser:	Cell Phones	103723	124.69
					VENDOR 01-3904	TOTALS	124.69
				DEPARTMENT 451	SEWER COLLECTION	TOTAL:	140.09

VENDOR SET: 01 CITY OF CHANUTE
FUND : 505 SEWER UTILITY
DEPARTMENT: 453 SEWER TREATMENT/DISPOSAL
INVOICE DATE RANGE: 1/01/1998 THRU 99/99/9999
PAY DATE RANGE: 8/03/2020 THRU 8/05/2020
BUDGET TO USE: CB-CURRENT BUDGET

VENDOR	NAME	ITEM #	G/L ACCOUNT	NAME	DESCRIPTION	CHECK #	AMOUNT
01-0236	MC MASTER-CARR SUPPLY	I-42833790	505 4453.01-6565.00	Small Tools &:	Gauge	103699	76.78
					VENDOR 01-0236	TOTALS	76.78
01-0269	OIL PATCH PUMP & SUPPL	I-192326	505 4453.01-6705.00	Machinery and:	Pipe/Thread	103708	11.13
					VENDOR 01-0269	TOTALS	11.13
01-0715	CLEAN UNIFORM COMPANY	I-20152755	505 4453.01-4409.00	Other Rentals:	Uniforms - WWTP	103670	60.66
					VENDOR 01-0715	TOTALS	60.66
01-2079	PACE ANALYTICAL SERVIC	I-2060110661	505 4453.01-3217.00	Laboratory Se:	Lab Testing - Weekly	103710	227.00
01-2079	PACE ANALYTICAL SERVIC	I-2060110914	505 4453.01-3217.00	Laboratory Se:	Lab Testing - Weekly	103710	227.00
					VENDOR 01-2079	TOTALS	454.00
01-2684	BUMPER TO BUMPER	I-1558017	505 4453.01-6705.00	Machinery and:	Coil/Dist Rotor/Dist	103663	117.60
01-2684	BUMPER TO BUMPER	I-1558203	505 4453.01-6705.00	Machinery and:	Battery Terminal	103663	2.75
					VENDOR 01-2684	TOTALS	120.35
01-3630	AT&T	I-07152020	505 4453.01-5211.00	Telephone Ser:	Phone Lines	103658	229.46
					VENDOR 01-3630	TOTALS	229.46
01-3904	VERIZON WIRELESS	I-9858893537	505 4453.01-5211.00	Telephone Ser:	Cell Phones	103723	89.34
					VENDOR 01-3904	TOTALS	89.34
01-4262	RED MUNICIPAL & INDUST	I-13665	505 4453.01-6705.00	Machinery and:	Hyd. Sewage Hose Men	103715	290.86
					VENDOR 01-4262	TOTALS	290.86

DEPARTMENT 453 SEWER TREATMENT/DISPOSAL TOTAL: 1,332.58

VENDOR SET: 01 CITY OF CHANUTE
FUND : 505 SEWER UTILITY
DEPARTMENT: 456 STORM DRAINAGE
INVOICE DATE RANGE: 1/01/1998 THRU 99/99/9999
PAY DATE RANGE: 8/03/2020 THRU 8/05/2020
BUDGET TO USE: CB-CURRENT BUDGET

VENDOR	NAME	ITEM #	G/L ACCOUNT	NAME	DESCRIPTION	CHECK #	AMOUNT
01-4262	RED MUNICIPAL & INDUST	I-13665	505 4456.00-6705.00	Machinery and:	Hyd. Sewage Hose Men	103715	290.86
					VENDOR 01-4262 TOTALS		290.86
				DEPARTMENT 456	STORM DRAINAGE	TOTAL:	290.86
				VENDOR SET 505	SEWER UTILITY	TOTAL:	1,763.53

VENDOR SET: 01 CITY OF CHANUTE
FUND : 506 FIBER/COMMUNICATION
DEPARTMENT: 415 FIBER COMMUNICATIONS
INVOICE DATE RANGE: 1/01/1998 THRU 99/99/9999
PAY DATE RANGE: 8/03/2020 THRU 8/05/2020
BUDGET TO USE: CB-CURRENT BUDGET

VENDOR	NAME	ITEM #	G/L ACCOUNT	NAME	DESCRIPTION	CHECK #	AMOUNT
01-0088	CLEAVERS FARM & HOME	I-2007-645413	506 4415.00-6532.00	Hardware :	Hooks	103672	5.50
					VENDOR 01-0088	TOTALS	5.50
01-0318	STANION WHOLESALE	I-4975622-00	506 4415.00-6565.00	Small Tools &:	Fish Tape	103718	87.26
					VENDOR 01-0318	TOTALS	87.26
01-2160	BERNIE ELECTRIC WHOLES	I-S100078757.001	506 4415.00-6514.00	Electrical Su:	Wire for Power Conne	103661	201.63
					VENDOR 01-2160	TOTALS	201.63
01-2684	BUMPER TO BUMPER	I-1558194	506 4415.00-6532.00	Hardware :	Clamps	103663	5.79
01-2684	BUMPER TO BUMPER	I-1558194	506 4415.00-6599.00	Miscellaneous:	Tie Straps	103663	35.50
01-2684	BUMPER TO BUMPER	I-1558474	506 4415.00-6599.00	Miscellaneous:	Tie Straps	103663	31.36
					VENDOR 01-2684	TOTALS	72.65
01-4385	SPARKLIGHT	I-072020	506 4415.00-5211.00	Telephone Ser:	Internet Service	103717	100.53
					VENDOR 01-4385	TOTALS	100.53
01-5006	LIGHTSPEED TECHNOLOGIE	I-6104	506 4415.00-3299.00	Other Profess:	Year 2 on Maint - ON	103693	4,694.29
					VENDOR 01-5006	TOTALS	4,694.29
01-5192	CENTURY LINK	I-131171346	506 4415.00-5211.00	Telephone Ser:	Internet Service	103667	3,243.00
					VENDOR 01-5192	TOTALS	3,243.00

DEPARTMENT 415 FIBER COMMUNICATIONS TOTAL: 8,404.86

VENDOR SET 506 FIBER/COMMUNICATION TOTAL: 8,404.86

VENDOR SET: 01 CITY OF CHANUTE
FUND : 528 KDHE - I & I PROJECT
DEPARTMENT: 528 ADM SERVICES
INVOICE DATE RANGE: 1/01/1998 THRU 99/99/9999
PAY DATE RANGE: 8/03/2020 THRU 8/05/2020
BUDGET TO USE: CB-CURRENT BUDGET

VENDOR	NAME	ITEM #	G/L ACCOUNT	NAME	DESCRIPTION	CHECK #	AMOUNT
01-5054	TRI-STAR UTILITIES, IN	I-4	528 4528.00-3299.00	Other Profess:	SSCSI - Phase 4 - Pa	103719	219,992.40
	PROJ: 550-2019-002	WASTEWATER PROJECTS		Phase 4 - SSCSI			
					VENDOR 01-5054	TOTALS	219,992.40
				DEPARTMENT 528	ADM SERVICES	TOTAL:	219,992.40
				VENDOR SET 528	KDHE - I & I PROJECT	TOTAL:	219,992.40

VENDOR SET: 01 CITY OF CHANUTE
FUND : 601 VEHICLE SERVICES
DEPARTMENT: 811 VEHICLE SERVICES SHOP
INVOICE DATE RANGE: 1/01/1998 THRU 99/99/9999
PAY DATE RANGE: 8/03/2020 THRU 8/05/2020
BUDGET TO USE: CB-CURRENT BUDGET

BANK: AP

VENDOR	NAME	ITEM #	G/L ACCOUNT	NAME	DESCRIPTION	CHECK #	AMOUNT
01-0715	CLEAN UNIFORM COMPANY	I-20152748	601 4811.00-4409.00	Other Rentals:	Shop Towels	103670	19.85
01-0715	CLEAN UNIFORM COMPANY	I-20152750	601 4811.00-4409.00	Other Rentals:	Uniforms - Veh Servi	103670	17.82
					VENDOR 01-0715 TOTALS		37.67
01-2196	CHANDLER OIL, LLC	I-60302	601 4811.00-6201.00	Diesel Fuel :	700 gals Diesel @ Co	103668	1,745.10
					VENDOR 01-2196 TOTALS		1,745.10
01-3904	VERIZON WIRELESS	I-9858893537	601 4811.00-5211.00	Telephone Ser:	Cell Phones	103723	44.67
					VENDOR 01-3904 TOTALS		44.67
01-5037	KANSAS BG INC	I-PI0021863	601 4811.00-6704.00	Lubricants (G:	Additives	103686	167.70
					VENDOR 01-5037 TOTALS		167.70

DEPARTMENT 811 VEHICLE SERVICES SHOP TOTAL: 1,995.14

VENDOR SET 601 VEHICLE SERVICES TOTAL: 1,995.14

VENDOR SET: 01 CITY OF CHANUTE
FUND : 602 UTILITY SERVICES
DEPARTMENT: 821 UTILITY ADMIN SERVICE
INVOICE DATE RANGE: 1/01/1998 THRU 99/99/9999
PAY DATE RANGE: 8/03/2020 THRU 8/05/2020
BUDGET TO USE: CB-CURRENT BUDGET

BANK: AP

VENDOR	NAME	ITEM #	G/L ACCOUNT	NAME	DESCRIPTION	CHECK #	AMOUNT
01-3630	AT&T	I-07152020	602 4821.00-5211.00	Telephone Ser:	Phone Lines	103658	114.73
					VENDOR 01-3630	TOTALS	114.73
01-3904	VERIZON WIRELESS	I-9858893537	602 4821.00-5211.00	Telephone Ser:	Cell Phones	103723	84.68
					VENDOR 01-3904	TOTALS	84.68
				DEPARTMENT 821	UTILITY ADMIN SERVICE	TOTAL:	199.41

VENDOR SET: 01 CITY OF CHANUTE
FUND : 602 UTILITY SERVICES
DEPARTMENT: 822 UTILITY BUSINESS OFFICE
INVOICE DATE RANGE: 1/01/1998 THRU 99/99/9999
PAY DATE RANGE: 8/03/2020 THRU 8/05/2020
BUDGET TO USE: CB-CURRENT BUDGET

VENDOR	NAME	ITEM #	G/L ACCOUNT	NAME	DESCRIPTION	CHECK #	AMOUNT
01-3630	AT&T	I-07152020	602 4822.00-5211.00	Telephone Ser:	Phone Lines	103658	114.73
					VENDOR 01-3630 TOTALS		114.73
				DEPARTMENT 822	UTILITY BUSINESS OFFICE TOTAL:		114.73

VENDOR SET: 01 CITY OF CHANUTE BANK: AP
FUND : 602 UTILITY SERVICES
DEPARTMENT: 823 DATA PROCESSING
INVOICE DATE RANGE: 1/01/1998 THRU 99/99/9999
PAY DATE RANGE: 8/03/2020 THRU 8/05/2020
BUDGET TO USE: CB-CURRENT BUDGET

VENDOR	NAME	ITEM #	G/L ACCOUNT	NAME	DESCRIPTION	CHECK #	AMOUNT
01-0235	MC CARTY'S OFFICE MACH	I-P81337-00	602 4823.00-6106.00	Paper Product:	Toner Cartridges	103698	123.15
01-0235	MC CARTY'S OFFICE MACH	I-P81337-00	602 4823.00-6106.00	Paper Product:	Toner Cartridges	103698	123.16
					VENDOR 01-0235	TOTALS	246.31
01-0257	NAVRAT'S INC.	I-0171569-001	602 4823.00-6106.00	Paper Product:	Copier Paper	103705	162.61
					VENDOR 01-0257	TOTALS	162.61
01-3630	AT&T	I-07152020	602 4823.00-5211.00	Telephone Ser:	Phone Lines	103658	114.73
					VENDOR 01-3630	TOTALS	114.73
01-3904	VERIZON WIRELESS	I-9858893537	602 4823.00-5211.00	Telephone Ser:	Cell Phones	103723	121.97
					VENDOR 01-3904	TOTALS	121.97
01-5257	LAKELAND OFFICE SYSTEM	I-IN327559	602 4823.00-4312.00	R&M:Office Eq:	Copier Maint	103690	14.21
					VENDOR 01-5257	TOTALS	14.21
				DEPARTMENT 823	DATA PROCESSING	TOTAL:	659.83

VENDOR SET: 01 CITY OF CHANUTE
FUND : 602 UTILITY SERVICES
DEPARTMENT: 824 METER READING
INVOICE DATE RANGE: 1/01/1998 THRU 99/99/9999
PAY DATE RANGE: 8/03/2020 THRU 8/05/2020
BUDGET TO USE: CB-CURRENT BUDGET

VENDOR	NAME	ITEM #	G/L ACCOUNT	NAME	DESCRIPTION	CHECK #	AMOUNT
01-3904	VERIZON WIRELESS	I-9858893537	602 4824.00-5211.00	Telephone Ser:	Cell Phones	103723	44.67
					VENDOR 01-3904 TOTALS		44.67
				DEPARTMENT 824	METER READING	TOTAL:	44.67
				VENDOR SET 602	UTILITY SERVICES	TOTAL:	1,018.64

VENDOR SET: 01 CITY OF CHANUTE
FUND : 603 PUBLIC WORKS & COMPLEX
DEPARTMENT: 831 PUBLIC WORKS/COMPLEX
INVOICE DATE RANGE: 1/01/1998 THRU 99/99/9999
PAY DATE RANGE: 8/03/2020 THRU 8/05/2020
BUDGET TO USE: CB-CURRENT BUDGET

VENDOR	NAME	ITEM #	G/L ACCOUNT	NAME	DESCRIPTION	CHECK #	AMOUNT
01-0143	GALT PEST CONTROL, INC	I-610845	603 4831.00-4307.00	R&M:Grounds/G:	Bug Spraying	103677	220.00
					VENDOR 01-0143	TOTALS	220.00
01-0715	CLEAN UNIFORM COMPANY	I-20152748	603 4831.00-6536.00	Janitorial & :	Mops	103670	6.79
					VENDOR 01-0715	TOTALS	6.79
01-3548	MID-AMERICAN RESEARCH	I-0705077-IN	603 4831.00-6559.00	Safety Materi:	Hand Sanitizer	103700	185.00
					VENDOR 01-3548	TOTALS	185.00
01-3630	AT&T	I-07152020	603 4831.00-5211.00	Telephone Ser:	Phone Lines	103658	114.73
01-3630	AT&T	I-07152020	603 4831.00-5211.00	Telephone Ser:	Phone Lines	103658	114.73
					VENDOR 01-3630	TOTALS	229.46

DEPARTMENT 831 PUBLIC WORKS/COMPLEX TOTAL: 641.25

VENDOR SET 603 PUBLIC WORKS & COMPLEX TOTAL: 641.25

VENDOR SET: 01 CITY OF CHANUTE BANK: AP
FUND : 711 PAYROLL CLEARING
DEPARTMENT: N/A NON-DEPARTMENTAL
INVOICE DATE RANGE: 1/01/1998 THRU 99/99/9999
PAY DATE RANGE: 8/03/2020 THRU 8/05/2020
BUDGET TO USE: CB-CURRENT BUDGET

VENDOR	NAME	ITEM #	G/L ACCOUNT	NAME	DESCRIPTION	CHECK #	AMOUNT
01-4820	CHRISTOPHER LYONS	I-2020	711 21321.08.000	Group Health :	Health Ins Premiums	103696	71.00
					VENDOR 01-4820 TOTALS		71.00
				DEPARTMENT	NON-DEPARTMENTAL	TOTAL:	71.00
				VENDOR SET 711	PAYROLL CLEARING	TOTAL:	71.00
						REPORT GRAND TOTAL:	374,259.05